MICHIGAN TECHNOLOGICAL UNIVERSITY

R.L SMITH MECHANICAL ENGINEERING & MECHANICS BLDG ROOF REPLACEMENT Project

MTU PROJECT P# 20-24-04

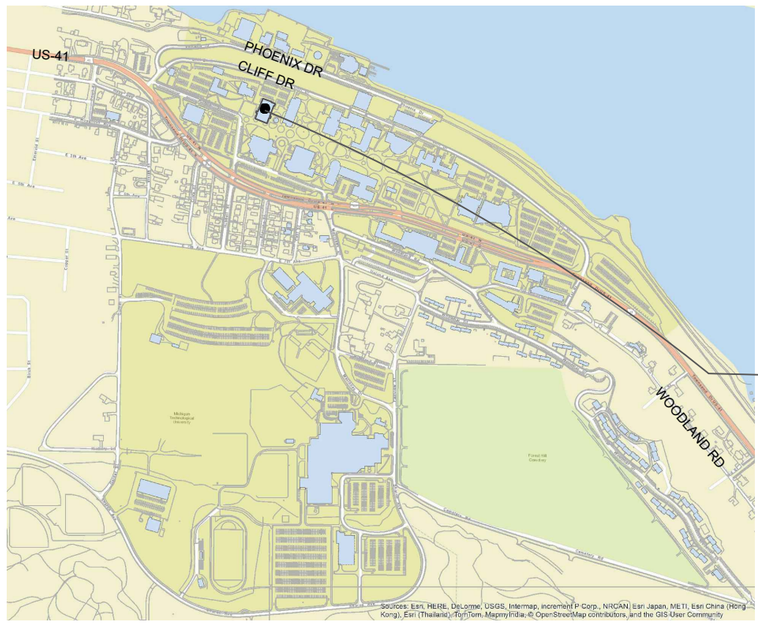

PROJECT LOCATION
R.L. SMITH MECHANICAL ENG.
& MECHANICS BUILDING
HOUGHTON, MI

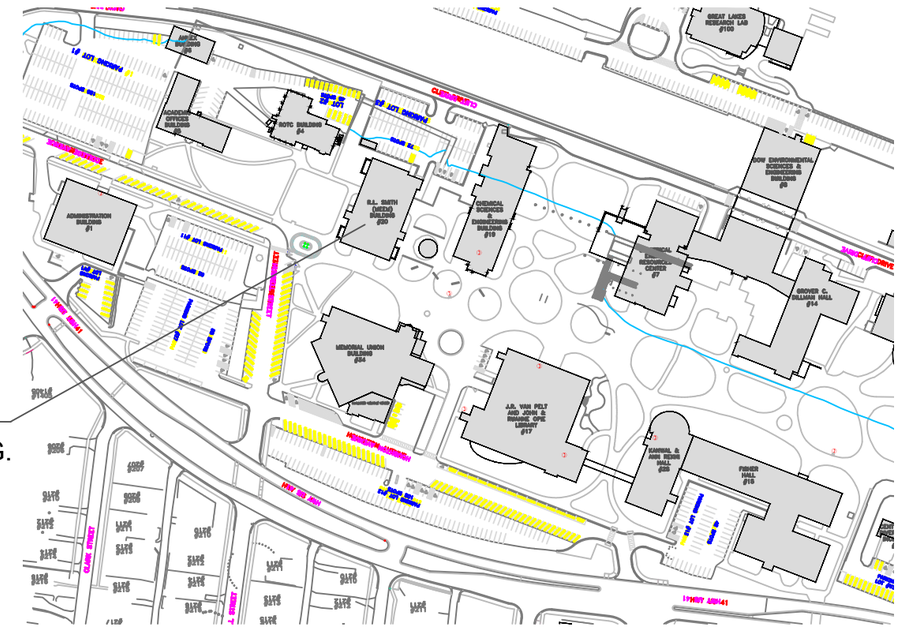

SITE PLAN
NTS

BIDDING

PREPARED BY:

MICHIGAN TECH FACILITIES MANAGEMENT
1400 TOWNSEND DRIVE
HOUGHTON, MI 49931-1295

SHEET LIST	
SHEET NO	SHEET NAME
G000	COVER SHEET
01	OVERALL ROOF PLAN
02	COMS EQUIPMENT LAYOUT
03	ROOFS A, B, & C - BASE BID
04	ROOFS D, E, F, & G - ALT. NO. 1
05	GENERAL NOTES AND DETAILS

MEEM ROOF AS-BUILT DRAWINGS-REFERENCE ONLY

Michigan Technological University
FACILITIES MANAGEMENT
1400 TOWNSEND DRIVE
HOUGHTON, MICHIGAN
(906) 487-2303 PH
(906) 487-3291 FX

DRAWN BY: JG
DESIGNED: JS
CHECKED: JS
APPROVED: JAG

R.L. SMITH MECH. ENG. & MECHANICS BLDG # 20
P# 20-24-04
ROOF REPLACEMENT PROJECT
COVER SHEET
BIDDING
3/4/2024

SHEET
G000

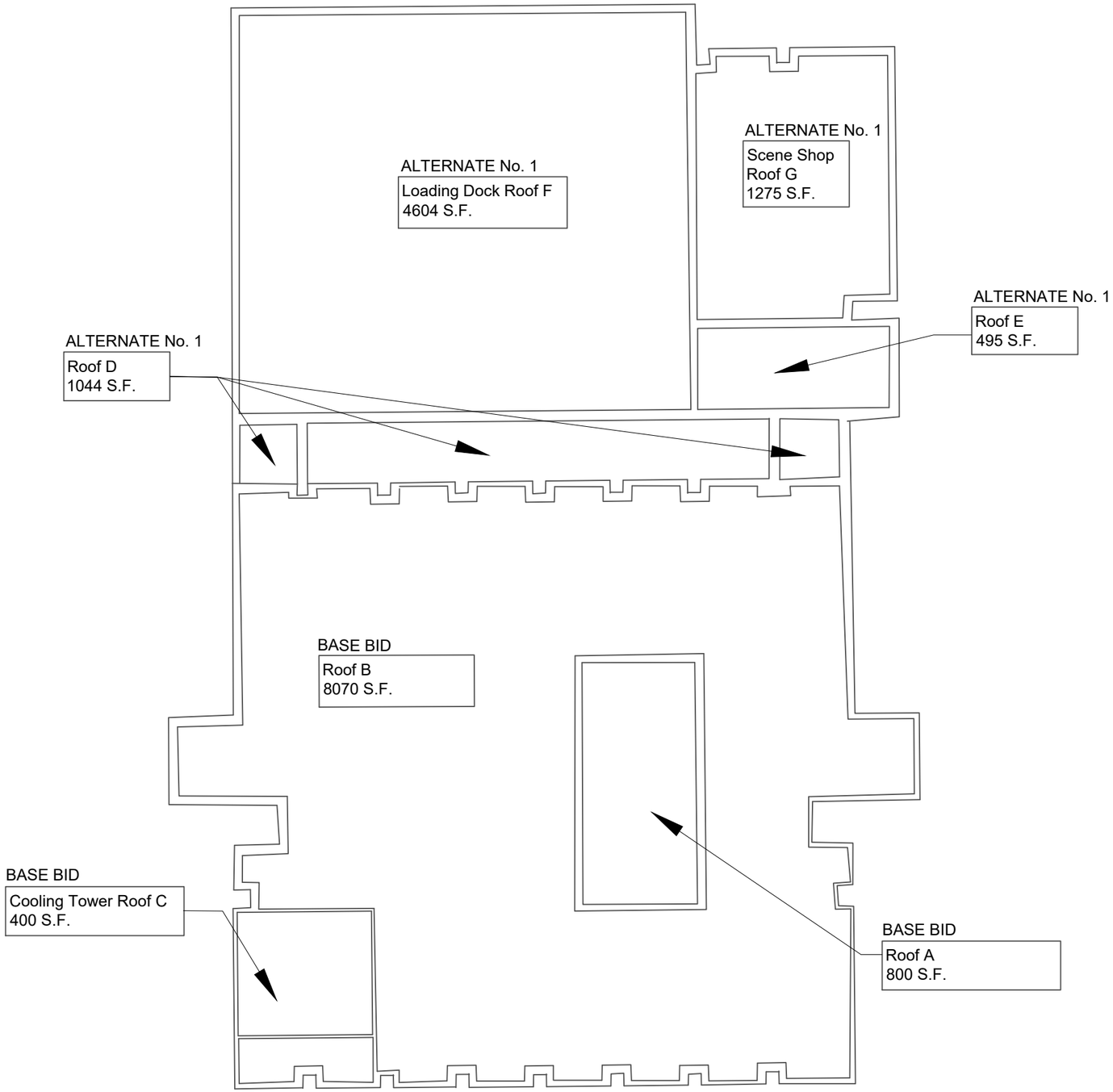

GENERAL SCOPE OF WORK:

- REMOVE AND REPLACE ROOF MEMBRANE AND COVER BOARD AT ALL ROOF SECTIONS.
- REMOVE AND REPLACE PARAPET COPING, FASCIA AND/OR ANY OTHER ROOF EDGE TRIM AT ALL ROOF SECTIONS.
- REMOVE AND REPLACE ROOF DRAINS AT ALL ROOF SECTIONS.
- EXISTING ROOF INSULATION TO REMAIN.

R.L. Smith Mechanical Engineering and Mechanics Building (MEEM) - OVERALL ROOF PLAN

SCALE: n.t.s. (Contractor to field verify all roof areas. Roof areas shown on plans are approximate)

NORTH

Michigan Technological University 1885
FACILITIES MANAGEMENT
1400 TOWNSEND DRIVE
HOUGHTON, MICHIGAN
(906) 487-2303 PH
(906) 487-3291 FX

DRAWN BY: JG
DESIGNED: JS
CHECKED: JS
APPROVED: JAG

R.L. SMITH MECH. ENG. & MECHANICS BLDG #20
P# 20-24-04
ROOF REPLACEMENT PROJECT
OVERALL ROOF PLAN
BIDDING
3/4/2024

SHEET
01

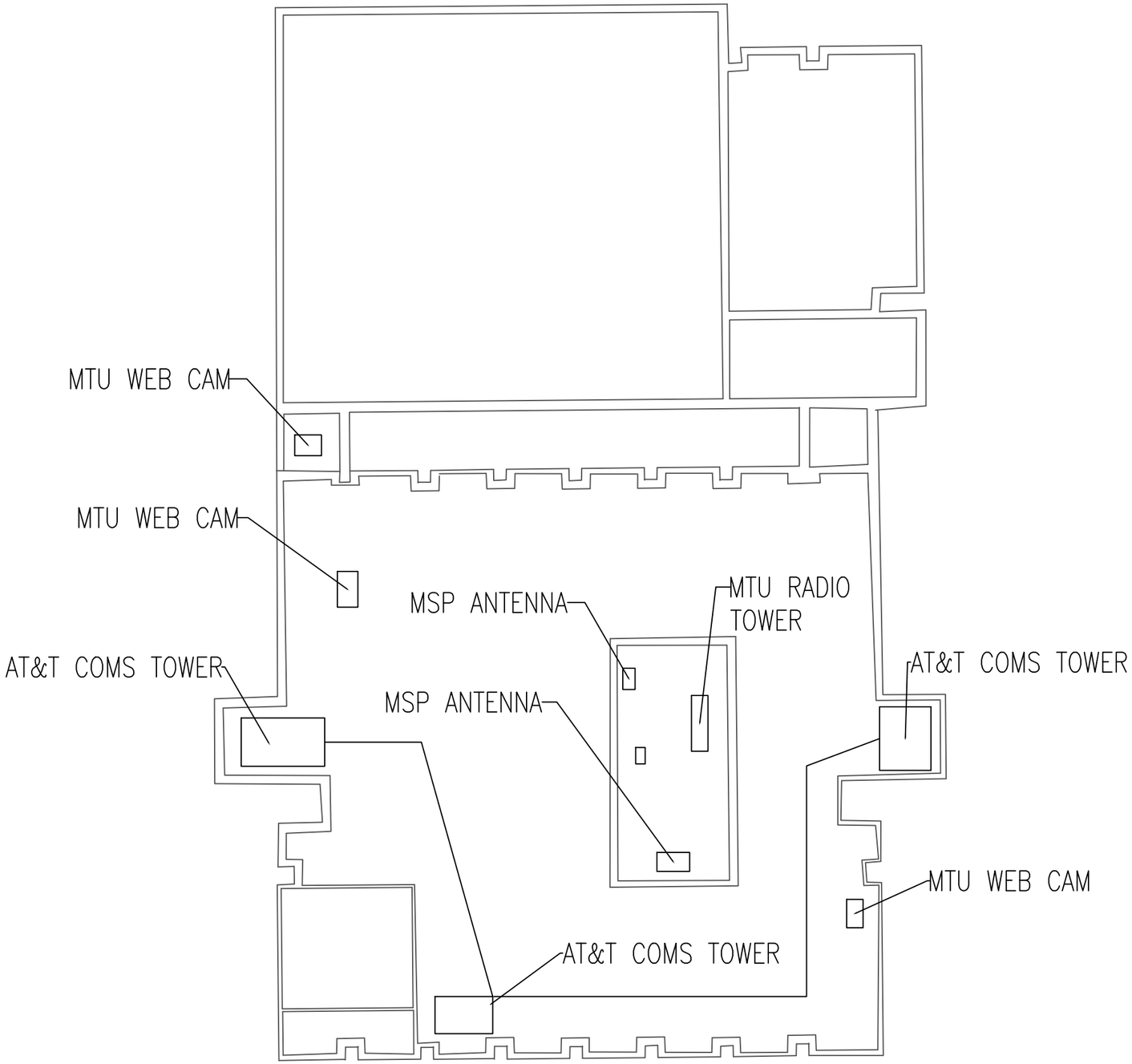

NOTES:

- CONTRACTOR TO COORDINATE WITH MTU AND RESPECTIVE EQUIPMENT OWNERS FOR MOVEMENT AND REPLACEMENT OF COMS EQUIPMENT DURING CONSTRUCTION PHASE.
- EQUIPMENT LOCATIONS ARE APPROXIMATE.

R.L. Smith Mechanical Engineering and Mechanics Building (MEEM) - ANTENNA & COMMUNICATIONS EQUIPMENT LOCATIONS

SCALE: n.t.s. (Contractor to field verify all roof areas. Roof areas shown on plans are approximate)

Michigan Technological University 1885
FACILITIES MANAGEMENT
1400 TOWNSEND DRIVE
HOUGHTON, MICHIGAN
(906) 487-2303 PH
(906) 487-3291 FX

DRAWN BY: JG
DESIGNED: JS
CHECKED: JS
APPROVED: JAG

R.L. SMITH MECH. ENG. & MECHANICS BLDG #20
P# 20-24-04
ROOF REPLACEMENT PROJECT
EQUIPMENT LOCATIONS
BIDDING
3/4/2024

SHEET
02

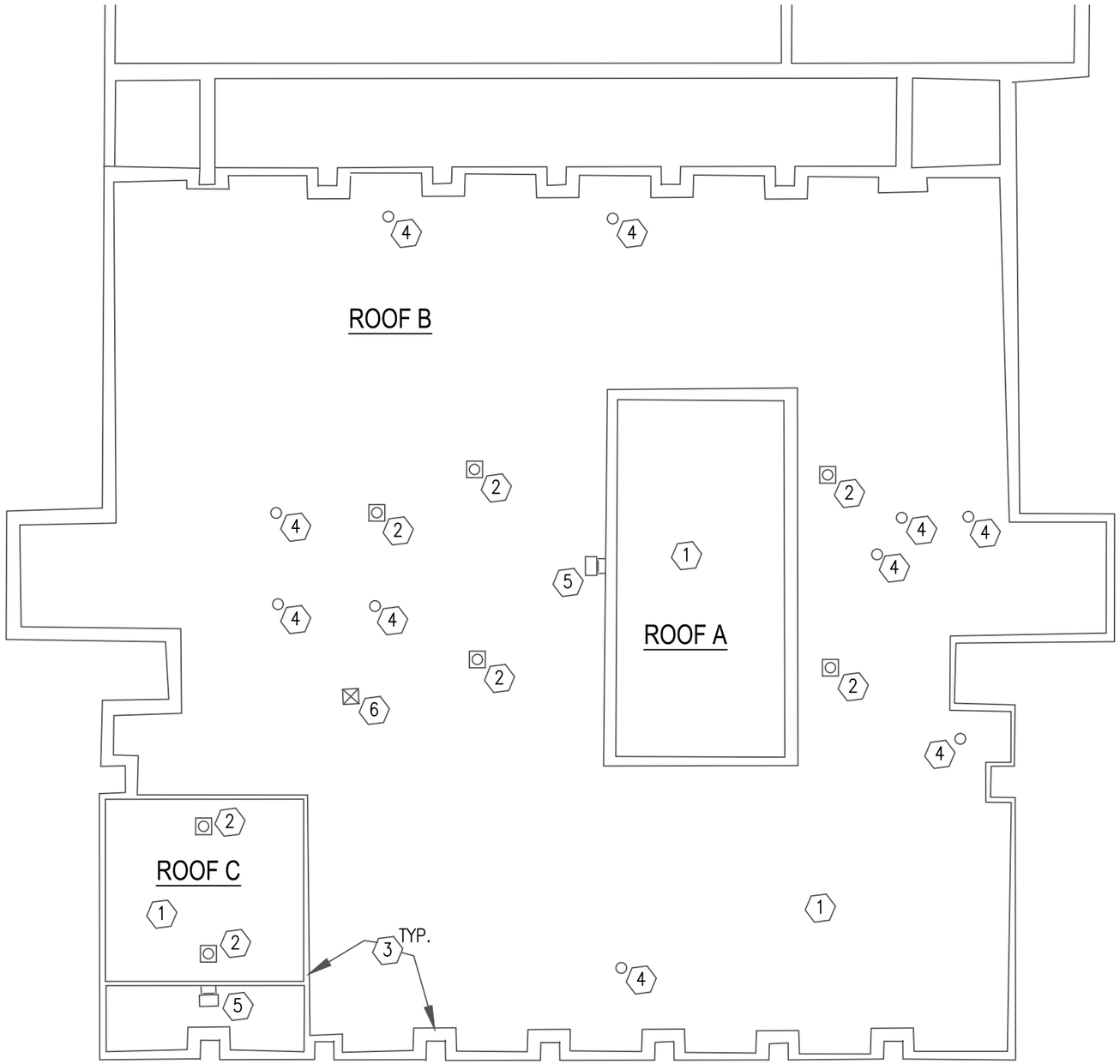

BASE BID:

1. CONTRACTOR SHALL REMOVE & PROPERLY DISPOSE OF EXISTING ROOF MEMBRANE AND ANY EXISTING COVER BOARD. EXISTING ROOF INSULATION TO REMAIN. CONTRACTOR SHALL FURNISH AND INSTALL NEW, FULLY ADHERED, 60 MIL. SINGLE PLY EPDM ROOF MEMBRANE AND 1/2" POLYISO COVER BOARD (SECURSHIELD HD) PER MANUFACTURER'S REQUIREMENTS OR APPROVED EQUIVALENTS.
2. CONTRACTOR TO REMOVE AND REPLACE ROOF DRAINS WITH APPROVED PRODUCT SIMILAR TO EXISTING.
3. CONTRACTOR SHALL REMOVE AND PROPERLY DISPOSE OF EXISTING PARAPET COPING, FASCIA, AND EDGE TRIMS. CONTRACTOR SHALL FURNISH & INSTALL NEW PARAPET COPING, FASCIA, AND EDGE TRIMS. (VERSITRIM OR APPROVED EQUAL) TO MATCH EXISTING CONDITIONS AND COLOR. INSTALL PER MANUFACTURER'S REQUIREMENTS.
4. ROOF VENT/PIPE PENETRATION
5. EXISTING LADDER AND ROOF PROTECTION MAT. REMOVE AND REPLACE ROOF PROTECTION MAT.
6. EXISTING ROOF HATCH.

ROOF PLAN FOR ROOFS A, B, AND C

SCALE: n.t.s. (Contractor to field verify all roof area penetrations and square footage)

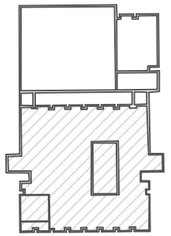

KEY PLAN
n.t.s.

NORTH

Michigan Technological University 1885
FACILITIES MANAGEMENT
1400 TOWNSEND DRIVE
HOUGHTON, MICHIGAN
(906) 487-2303 PH
(906) 487-3291 FX

DRAWN BY: JG
DESIGNED: JS
CHECKED: JS
APPROVED: JAG

R.L. SMITH MECH. ENG. & MECHANICS BLDG #20
P# 20-24-04
ROOF REPLACEMENT PROJECT
ROOF PLAN - ROOFS A, B, AND C
BIDDING
3/4/204

SHEET
03

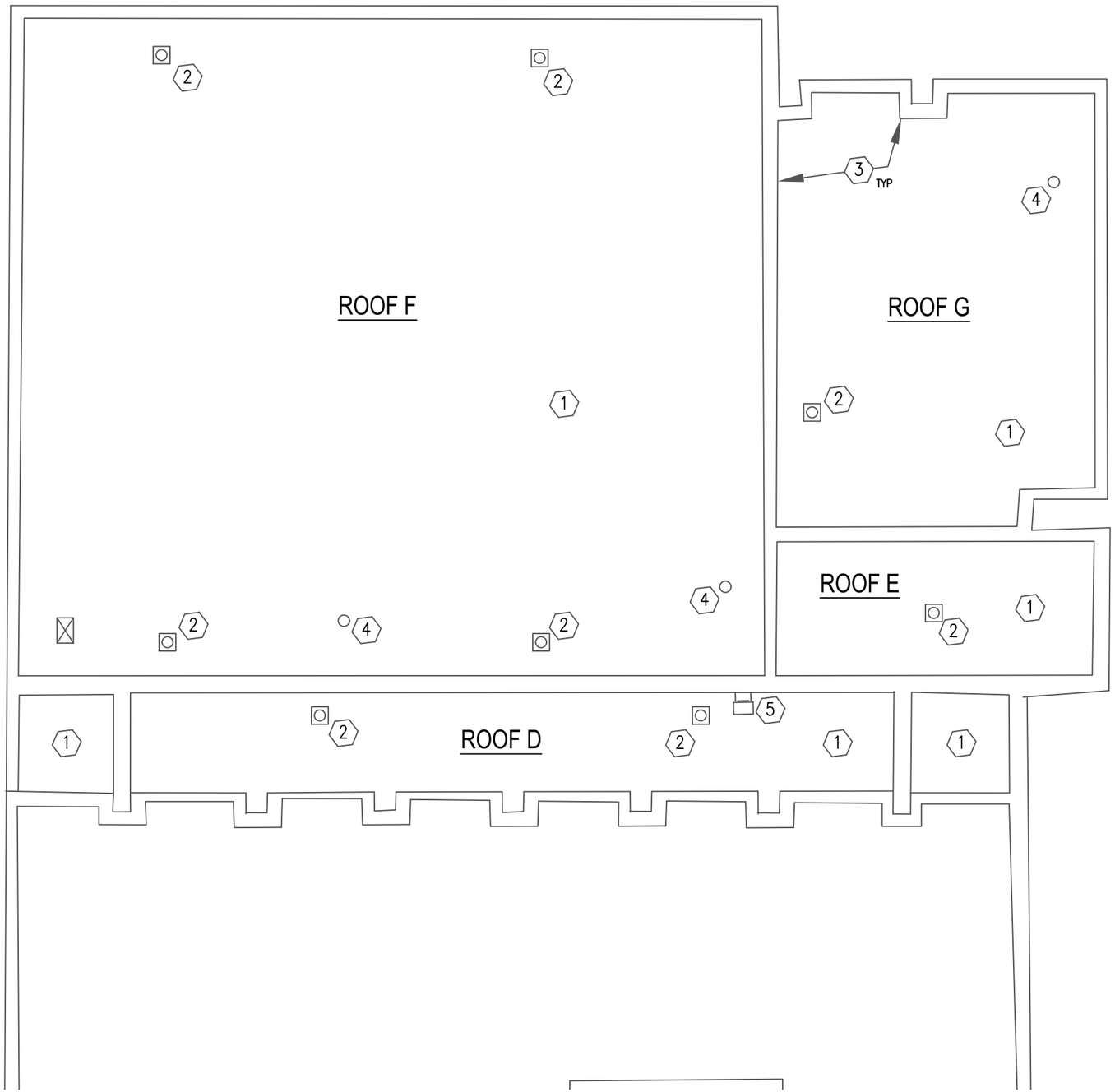

ALTERNATE NO. 1

1. CONTRACTOR SHALL REMOVE & PROPERLY DISPOSE OF EXISTING ROOF MEMBRANE AND ANY EXISTING COVER BOARD. EXISTING ROOF INSULATION TO REMAIN. CONTRACTOR SHALL FURNISH AND INSTALL NEW, FULLY ADHERED, 60 MIL. SINGLE PLY EPDM ROOF MEMBRANE AND 1/2" POLYISO COVER BOARD (SECURSHIELD HD) PER MANUFACTURER'S REQUIREMENTS OR APPROVED EQUIVALENTS.
2. CONTRACTOR TO REMOVE AND REPLACE ROOF DRAINS WITH APPROVED PRODUCT SIMILAR TO EXISTING.
3. CONTRACTOR SHALL REMOVE AND PROPERLY DISPOSE OF EXISTING PARAPET COPING, FASCIA, AND EDGE TRIMS. CONTRACTOR SHALL FURNISH & INSTALL NEW PARAPET COPING, FASCIA, AND EDGE TRIMS. (VERSITRIM OR APPROVED EQUAL) TO MATCH EXISTING CONDITIONS AND COLOR. INSTALL PER MANUFACTURER'S REQUIREMENTS.
4. ROOF VENT/PIPE PENETRATION
5. EXISTING LADDER AND ROOF PROTECTION MAT. REMOVE AND REPLACE ROOF PROTECTION MAT.

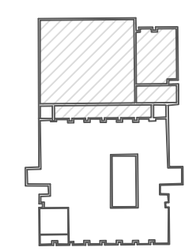

KEY PLAN
n.t.s.

NORTH

ROOF PLAN FOR ROOFS D , E, F AND G

SCALE: n.t.s. (Contractor to field verify all roof area penetrations and square footage)

Michigan Technological University 1885
FACILITIES MANAGEMENT
1400 TOWNSEND DRIVE
HOUGHTON, MICHIGAN
(906) 487-2303 PH
(906) 487-3291 FX

DRAWN BY: JG
DESIGNED: JS
CHECKED: JS
APPROVED: JAG

R.L. SMITH MECH. ENG. & MECHANICS BLDG #20
P# 20-24-04
ROOF REPLACEMENT PROJECT
ROOF PLAN - ROOFS D, E, F AND G
BIDDING
3/4/2024

SHEET
04

EXAMPLE PARAPET COPING DETAIL

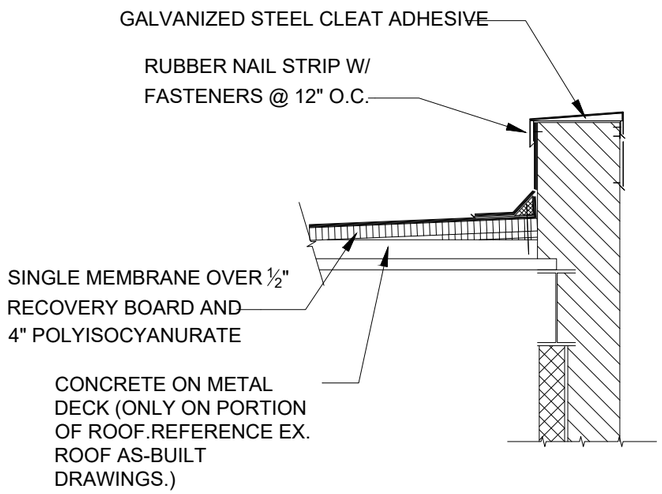

EXAMPLE ROOF DRAIN DETAIL

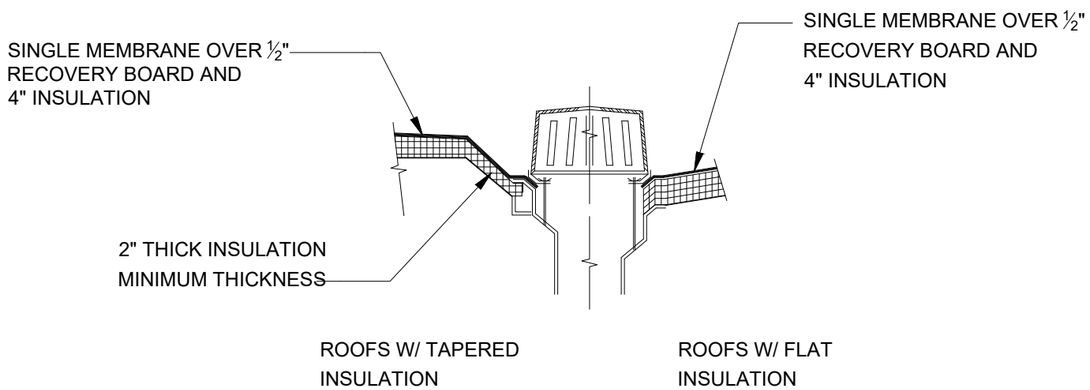

GENERAL NOTES:

1. THE EXISTING ROOF SYSTEMS VARY IN REGARDS TO EDGE OF ROOF CONSTRUCTION. EXAMPLES ON THIS SHEET DEPICT SOME BUT NOT ALL SCENARIOS PRESENT.
2. ALL FLASHING, TRIM, FASCIA, PARAPET CAPS AND BATON STRIPS ALONG WITH INCIDENTALS USED FOR ROOF INSTALLATION ARE TO BE REMOVED AND REPLACED WITH NEW, AS INDICATED ON BIDDING DRAWINGS.
3. ALL NEW METAL SHALL MATCH EXISTING BUILDING METALS & TRIM.
4. TWO-PIECE SNAP-ON COMPRESSION EDGE IS PERMITTED BUT SIZES MUST MATCH EXISTING METAL TRIM SIZES & COVERAGE. INSTALL PER MANUFACTURER'S REQUIREMENTS.
5. DETAILS ON THIS SHEET ARE SAMPLE DETAILS - CONTRACTOR SHALL FOLLOW MANUFACTURERS DETAILS TO MAINTAIN STATED WARRANTIES.
6. REFERENCE EXISTING ROOF AND WALL AS BUILT DRAWINGS FOR ADDITIONAL DETAIL (AVAILABLE UPON REQUEST).

EXAMPLE EDGE FASCIA DETAIL

2-PIECE COMPRESSION EDGE

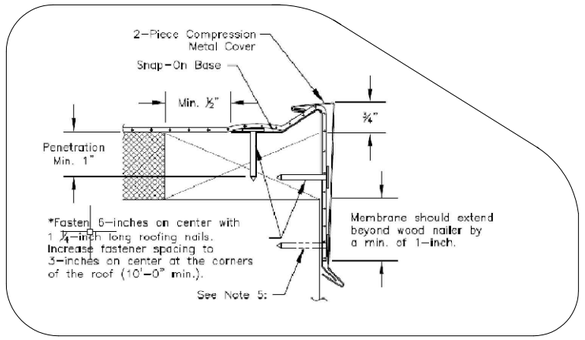

Michigan Technological University 1885
FACILITIES MANAGEMENT
1400 TOWNSEND DRIVE
HOUGHTON, MICHIGAN
(906) 487-2303 PH
(906) 487-3291 FX

DRAWN BY: JG
DESIGNED: JS
CHECKED: JS
APPROVED: JAG

R.L. SMITH MECH. ENG. & MECHANICS BLDG #20
P# 20-24-04
ROOF REPLACEMENT PROJECT
GENERAL NOTES AND DETAILS
BIDDING
3/4/2024

SHEET
05

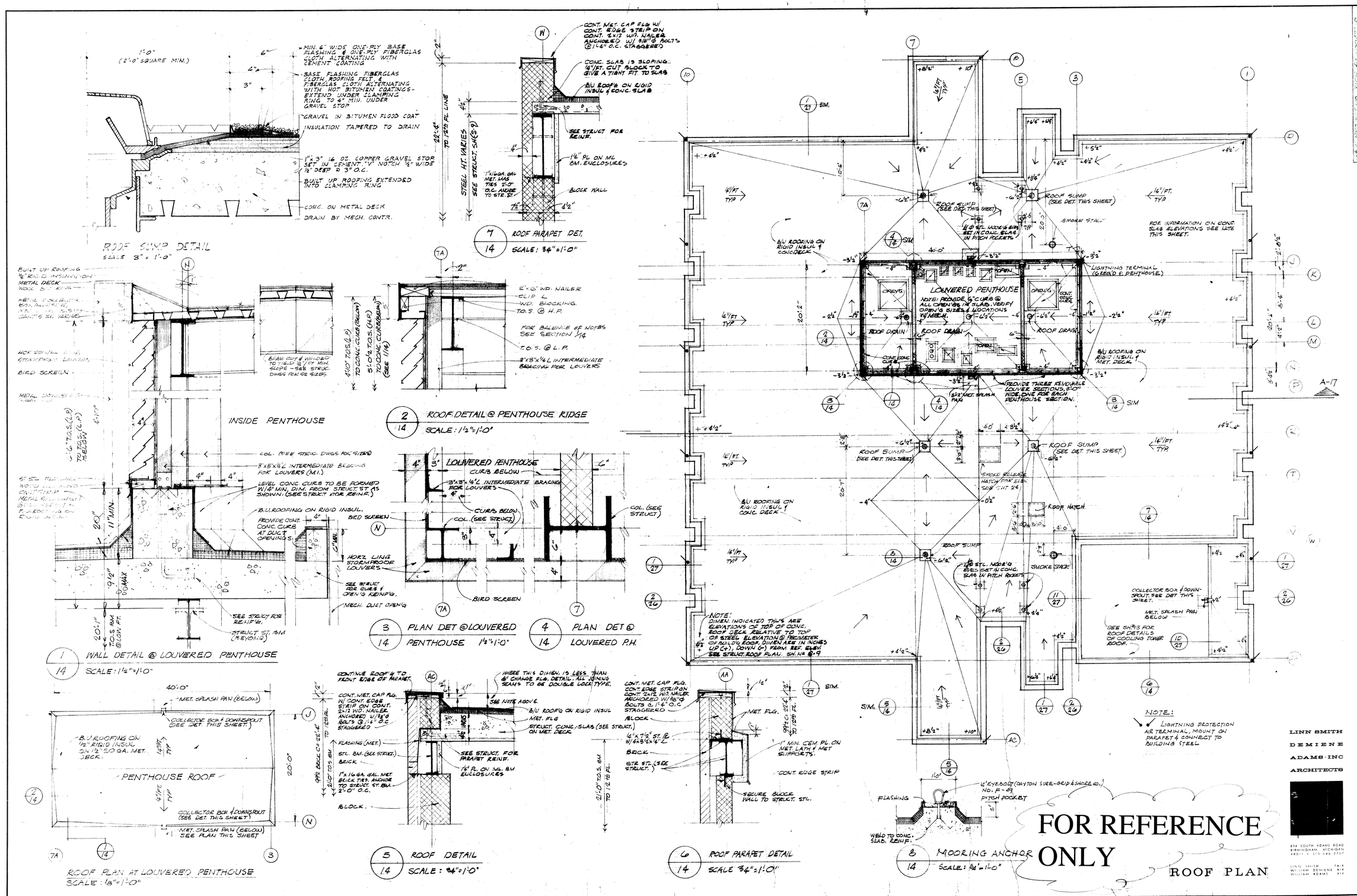

FOR REFERENCE ONLY

LINN SMITH DEMIENE ADAMS · INC ARCHITECTS

894 SOUTH ADAMS ROAD BIRMINGHAM, MICHIGAN 48011 • 313 646 3700

LINN SMITH FAIA
WILLIAM DEMIENE AIA
WILLIAM ADAMS AIA

REVISED 3/9/79 NEW REVIEW
11/23/77

REVIEW ☐ CONSTRUCTION ☐ FINAL RECORD ■

ACCOUNT NO. 101-2000-697-151

STATE OF MICHIGAN
EXECUTIVE OFFICE
BUILDING DIVISION
ADRIAN N. LANGIUS, DIRECTOR

MECHANICAL ENGINEERING – ENGINEERING MECHANICS BUILDING
MICHIGAN TECHNOLOGICAL UNIVERSITY – HOUGHTON, MICHIGAN

SHEET NO.	JOB NO.	DRAWN	TRACED	CHECKED	APPROVED
14	6521				

MICHIGAN TECHNOLOGICAL UNIVERSITY

ROZSA CENTER for the PERFORMING ARTS
NORTH ROOF REPLACEMENT Project

MTU PROJECT P# 10-24-01

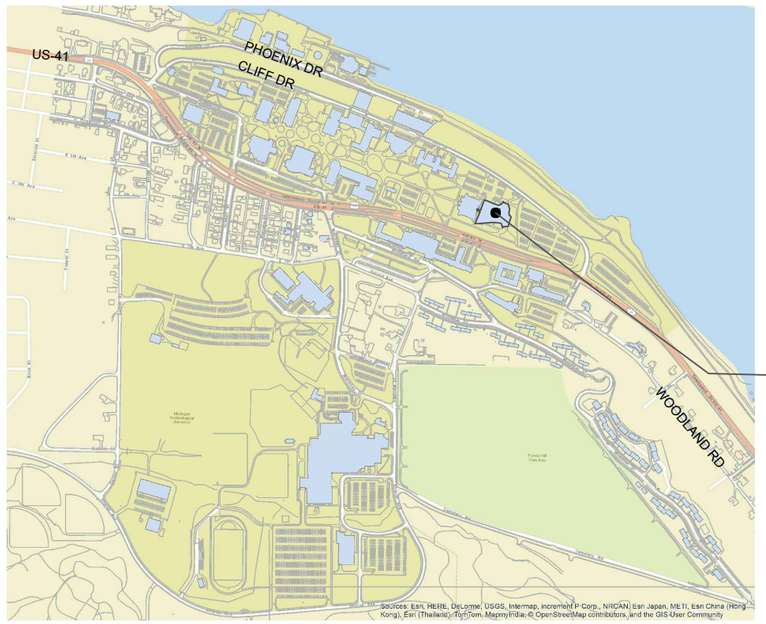

PROJECT LOCATION
ROZSA CENTER for the
PERFORMING ARTS
HOUGHTON, MI

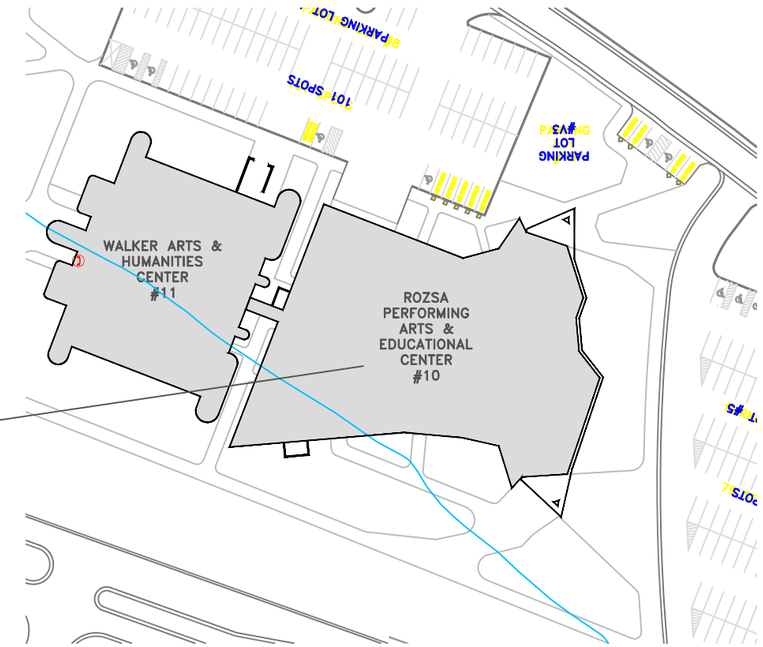

SITE PLAN
NTS

BIDDING

PREPARED BY:

MICHIGAN TECH FACILITIES MANAGEMENT
1400 TOWNSEND DRIVE
HOUGHTON, MI 49931-1295

SHEET LIST	
SHEET NO	SHEET NAME
G000	COVER SHEET
01	OVERALL ROOF PLAN
02	ROOF PLAN FOR SECTION F
03	GENERAL NOTES AND DETAILS

ROZSA CENTER ROOF AS-BUILT DRAWINGS-REFERENCE ONLY

Michigan Technological University
FACILITIES MANAGEMENT
1400 TOWNSEND DRIVE
HOUGHTON, MICHIGAN
(906) 487-2303 PH
(906) 487-3291 FX

DRAWN BY: JM
DESIGNED: JS
CHECKED: JS
APPROVED: JAG

ROZSA CENTER for the PERFORMING ARTS #10
P# 10-24-01
NORTH ROOF REPLACEMENT PROJECT - PHASE 2
COVER SHEET
BIDDING
3/4/2024

SHEET
G000

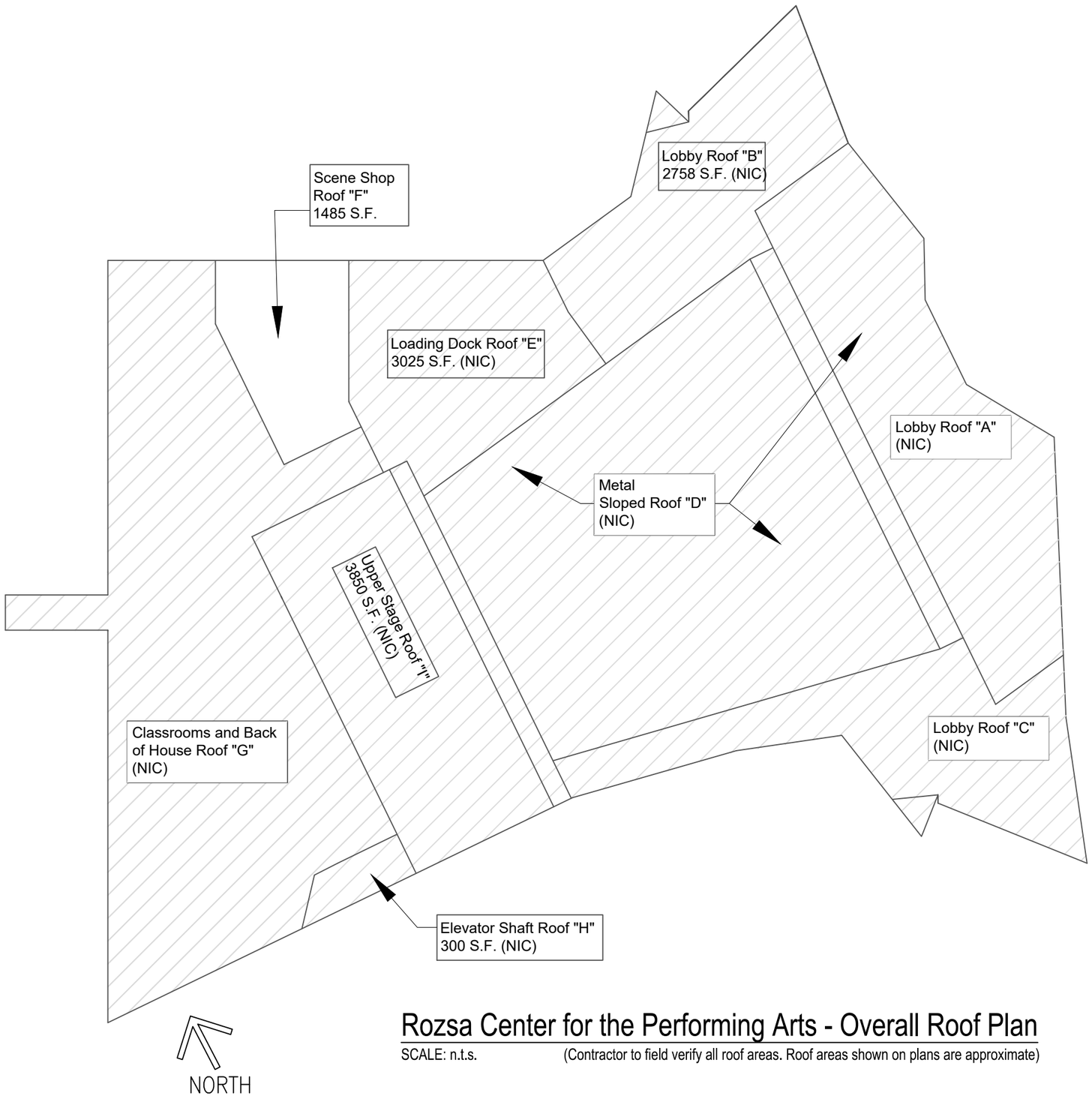

GENERAL SCOPE:

- REMOVE AND REPLACE ROOF MEMBRANE AND COVER BOARD AT ROOF SECTION F
- REMOVE AND REPLACE PARAPET COPING, FASCIA AND/OR ANY OTHER ROOF EDGE TRIM AT ROOF SECTION F.
- REMOVE AND SALVAGE EXISTING ROOF DRAINS
- EXISTING ROOF INSULATION TO REMAIN.

Rozsa Center for the Performing Arts - Overall Roof Plan

SCALE: n.t.s. (Contractor to field verify all roof areas. Roof areas shown on plans are approximate)

Michigan Technological University 1885
FACILITIES MANAGEMENT
1400 TOWNSEND DRIVE
HOUGHTON, MICHIGAN
(906) 487-2303 PH
(906) 487-3291 FX

DRAWN BY: JM
DESIGNED: JS
CHECKED: JS
APPROVED: JAG

ROZSA CENTER for the PERFORMING ARTS #10
P# 10-24-01
NORTH ROOF REPLACEMENT PROJECT - PHASE 2
OVERALL ROOF PLAN
BIDDING
3/4/2024

SHEET
01

PHOTO 01 - ROOF F

KEY NOTES:

1. CONTRACTOR SHALL REMOVE & PROPERLY DISPOSE OF EXISTING ROOF MEMBRANE AND 1/2" FIBER WOOD BD. EXISTING ROOF INSULATION TO REMAIN. CONTRACTOR SHALL FURNISH AND INSTALL NEW FULLY ADHERED 60 MIL. SINGLE PLY EPDM ROOF MEMBRANE AND 1/2" POLYISO COVER BOARD (SECURSHIELD HD OR APPROVED EQUAL) PER MANUFACTURER'S REQUIREMENTS.
2. EXISTING ROOF DRAINS TO BE REUSED.
3. CONTRACTOR SHALL REMOVE AND PROPERLY DISPOSE OF EXISTING PARAPET COPING, FASCIA, AND EDGE TRIMS. CONTRACTOR SHALL FURNISH & INSTALL NEW PARAPET COPING, FASCIA, AND EDGE TRIMS. (VERSITIRIM OR APPROVED EQUAL). MATCH EXISTING CONDITIONS AND COLOR. INSTALL PER MANUFACTURER'S REQUIREMENTS.
4. EQUIPMENT ROOF CURB. COORDINATE ROOF REPLACEMENT WORK WITH MECHANICAL EQUIPMENT REPLACEMENT ON ROOF F. (REF PHOTO 1)
5. ROOF VENT/PIPE PENETRATION

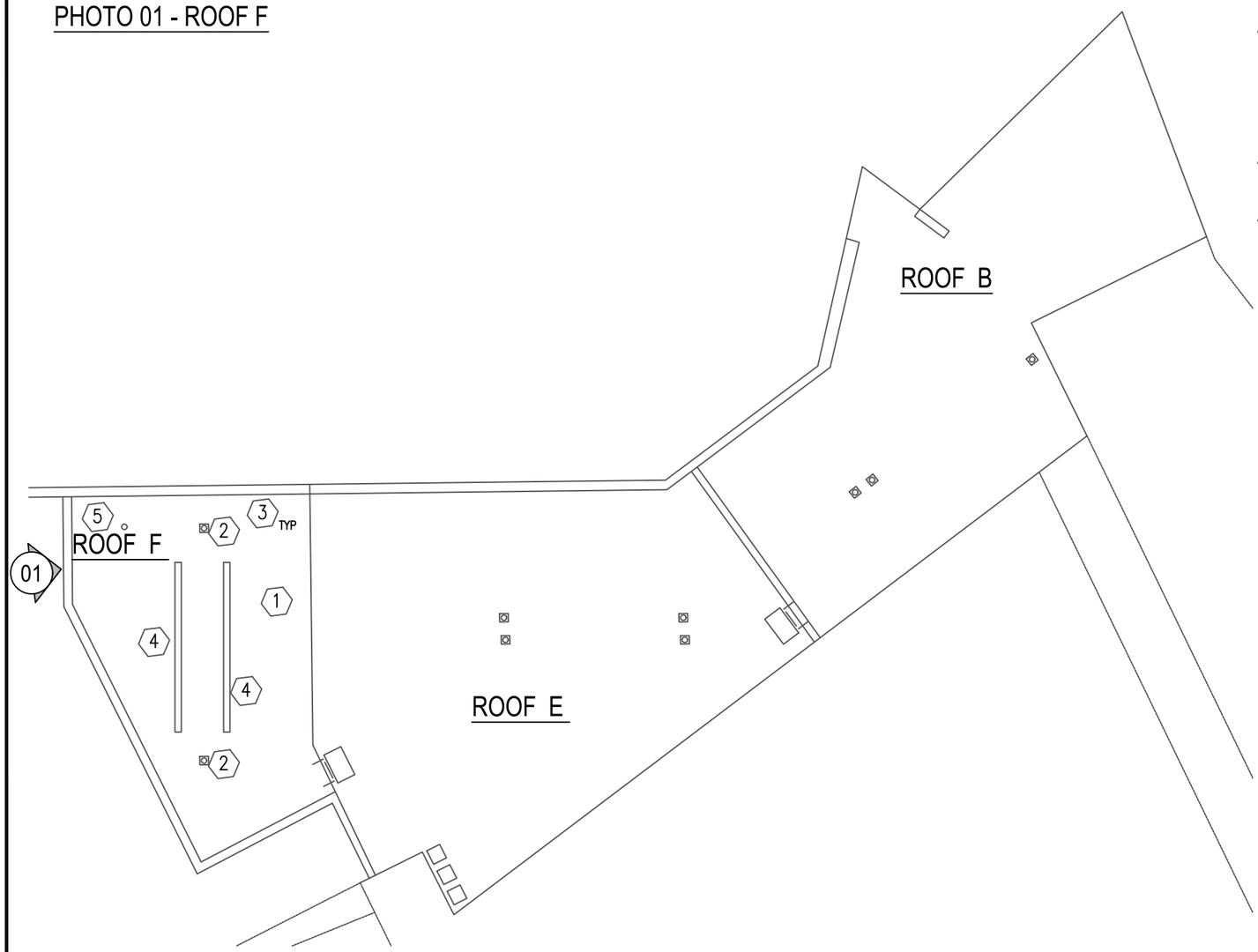

ROOF PLAN FOR ROOFS B, E AND F

SCALE: n.t.s. (Contractor to field verify all roof area penetrations and square footage)

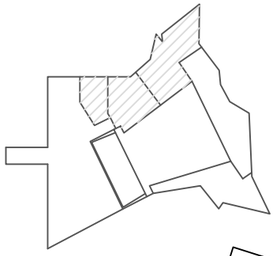

KEY PLAN
n.t.s.

NORTH

Michigan Technological University 1885

FACILITIES MANAGEMENT
1400 TOWNSEND DRIVE
HOUGHTON, MICHIGAN

(906) 487-2303 PH
(906) 487-3291 FX

DRAWN BY: JM
DESIGNED: JS
CHECKED: JS
APPROVED: JAG

ROZSA CENTER for the PERFORMING ARTS #10
P# 10-24-01
NORTH ROOF REPLACEMENT PROJECT - PHASE 2
ROOF PLAN - ROOFS B, E AND F
BIDDING
3/4/2024

SHEET
02

EXAMPLE PARAPET COPING DETAIL

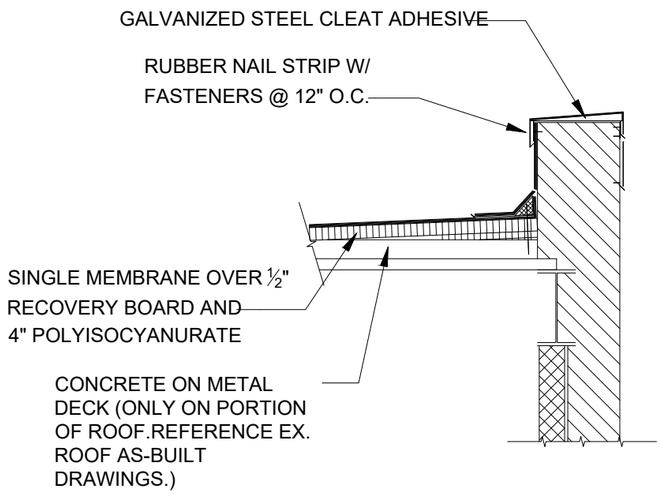

EXAMPLE PARAPET COPING DETAIL

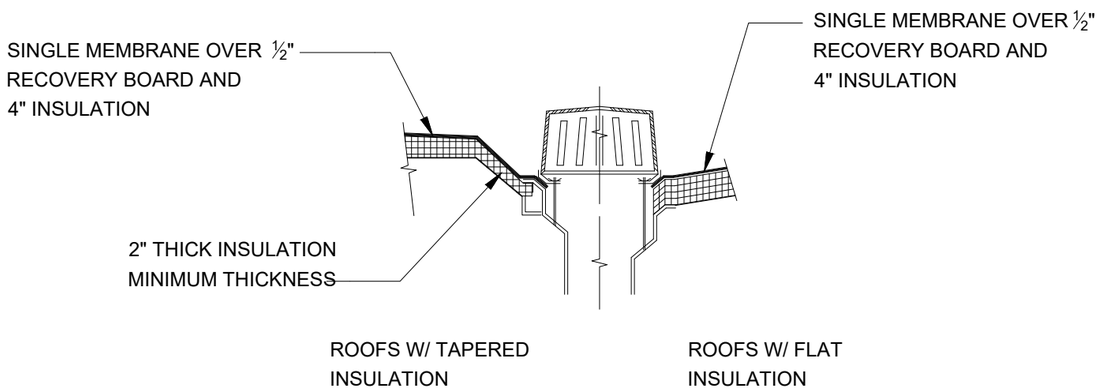

GENERAL NOTES:

1. THE EXISTING ROOF SYSTEMS VARY IN REGARDS TO EDGE OF ROOF CONSTRUCTION. EXAMPLES ON THIS SHEET DEPICT SOME BUT NOT ALL SCENARIOS PRESENT AT THE ROZSA CENTER.
2. ALL FLASHING, TRIM, FASCIA, PARAPET CAPS AND BATON STRIPS ALONG WITH INCIDENTALS USED FOR ROOF INSTALLATION ARE TO BE REMOVED AND REPLACED WITH NEW, AS INDICATED ON BIDDING DRAWINGS.
3. ALL NEW METAL SHALL MATCH EXISTING BUILDING METALS & TRIM.
4. TWO-PIECE SNAP-ON COMPRESSION EDGE IS PERMITTED BUT SIZES MUST MATCH EXISTING METAL TRIM SIZES & COVERAGE. INSTALL PER MANUFACTURER'S REQUIREMENTS.
5. DETAILS ON THIS SHEET ARE SAMPLE DETAILS - CONTRACTOR SHALL FOLLOW MANUFACTURERS DETAILS TO MAINTAIN STATED WARRANTIES.
6. REFERENCE EXISTING ROZSA CENTER ROOF AND WALL AS BUILT DRAWINGS FOR ADDITIONAL DETAIL (PROVIDED UPON REQUEST).

EXAMPLE EDGE FACIA DETAIL

2-PIECE COMPRESSION EDGE

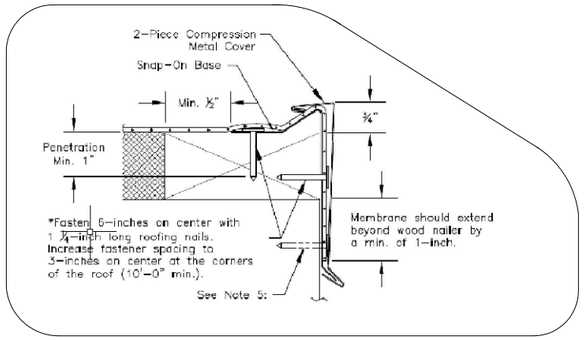

Michigan Technological University 1885
FACILITIES MANAGEMENT
1400 TOWNSEND DRIVE
HOUGHTON, MICHIGAN
(906) 487-2303 PH
(906) 487-3291 FX

DRAWN BY: JM
DESIGNED: JS
CHECKED: JS
APPROVED: JAG

ROZSA CENTER for the PERFORMING ARTS #10
P# 10-24-01
NORTH ROOF REPLACEMENT PROJECT - PHASE 2
GENERAL NOTES AND DETAILS
BIDDING
3/4/2024

SHEET
03

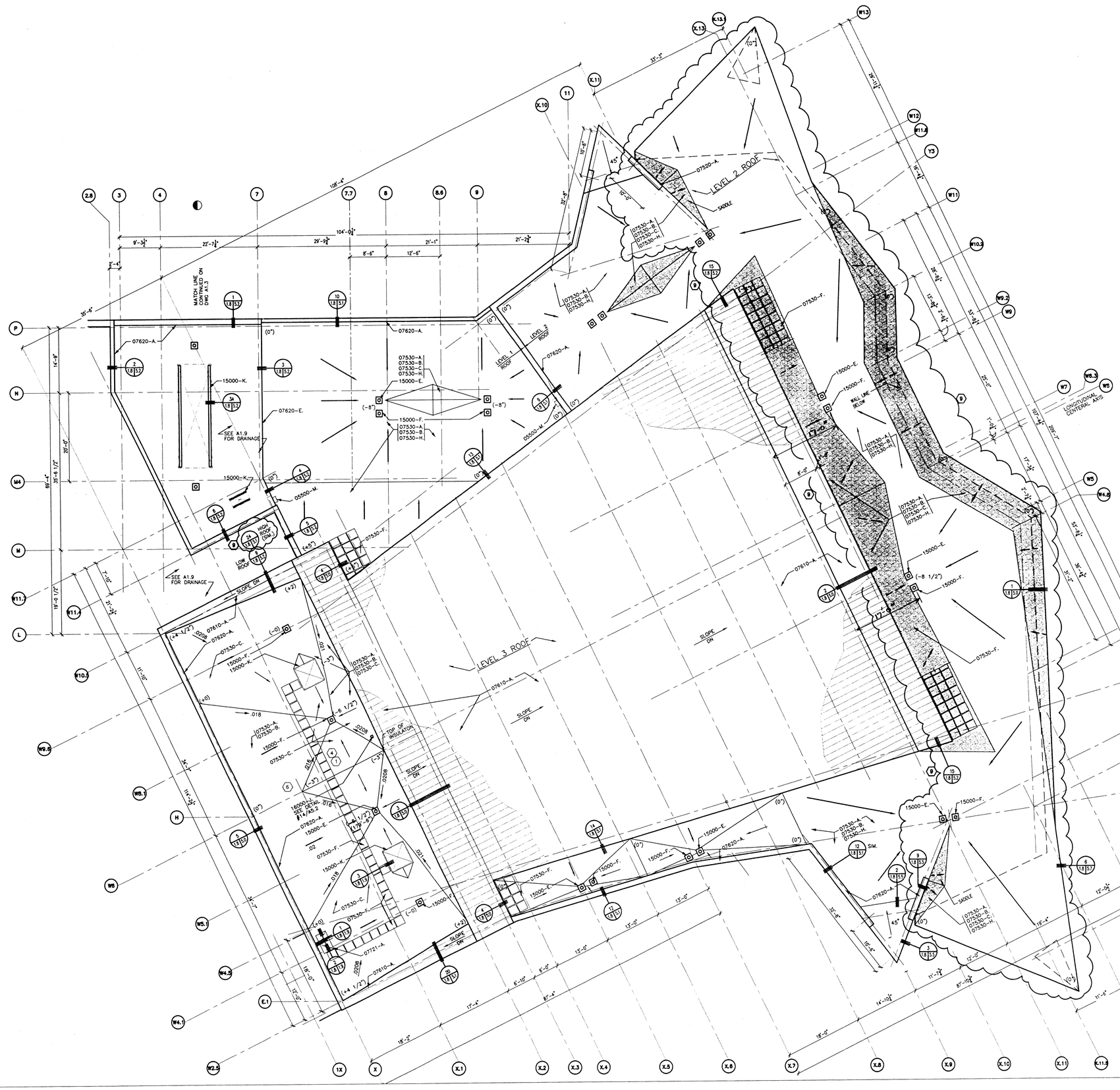

05500 METAL FABRICATION

05500-M. STEEL LADDER w/ 1/2" X 2 BAR SIDE RAILS AND 1" DIA. RUNGS 18" LONG @ 12" O.C.

07530 SINGLE PLY MEMBRANE ROOFING

07530-A. SINGLE PLY MEMBRANE ROOFING (EPDM) FASTENED AND FULLY ADHERED
TWO LAYERS OF 2" RIGID BOARD ROOF INSULATION
07530-B. TWO LAYERS OF 2" RIGID BOARD ROOF INSUL.
07530-C. TAPERED ROOF INSULATION
07530-F. WALK PADS
07530-H. 1/2" PERLITE BOARD

07610 METAL ROOFING AND CLADDING

07610-A. STANDING SEAM (2" HIGH, 18" O.C.)

07620 METAL FLASHING & TRIM

07620-A. COPING WITH CONCEALED SPLICE AND HOLD DOWN RETAINERS, PREFINISHED
07620-E. ALUMINUM GRAVEL STOP COVER OVER CONTINOUS RETAINER SUPPORT, PREFINISHED

07721 ROOF ACCESSORIES

07721-A. ROOF HATCH

15000 MECHANICAL

15000-E. ROOF DRAIN
15000-F. OVERFLOW DRAIN
15000-K. EQUIPMENT CURB

16000 ELECTRICAL

16000-J. LIGHTNING ARRESTER

GENERAL NOTES

A. FOR ANGLES ESTABLISHED AT PRINCIPAL INTERIOR & EXTERIOR WALLS, REFER TO DWG'S A1.0 & A1.1.

B. THE CONTRACTOR SHALL VERIFY & COORDINATE FINAL DIMENSIONS FOR THE WORK.

C. ROOF SYMBOLS

TAPERED INSULATION ROOF SLOPE

NATURAL ROOF SLOPE (SLOPING STEEL)

(0) INDICATES TOP OF 4" INSULATION & PERLITE BOARD

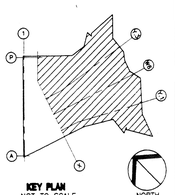

KEY PLAN
NOT TO SCALE

NORTH

DiClemente Siegel Design Inc.
Gunnar Birkerts, FAIA
Design Counsel
29195 Greenfield Rd Southfield, MI 248.559.1420

Michigan Technological University

Performing Arts and Education Center

Houghton, Michigan

George C. Izenour Associates
Theater Consultant
Stoney Creek, Connecticut

Jay Desal Consulting Engineers, Inc.
Structural Engineers
West Bloomfield, Michigan

Hitch, Inc.
Civil Engineers
Houghton, Michigan

ROOF PLAN PART A

REVISIONS		
ITEM	DATE	BY
BULLETIN (1)	6/11/98	KH
CONSTR.	6/11/98	KH
BULLETIN (6)	7/28/99	KH
BULLETIN (9)	11/23/99	KH

DRAWN	S.S.A.
CHECKED	A.U./KH
APPROVED	DMC
APPROVED FOR CONSTR.	KER
DATE	3/17/98
SCALE	1/8" = 1'-0"
PROJECT	970503
	A1.8

FOR REFERENCE ONLY

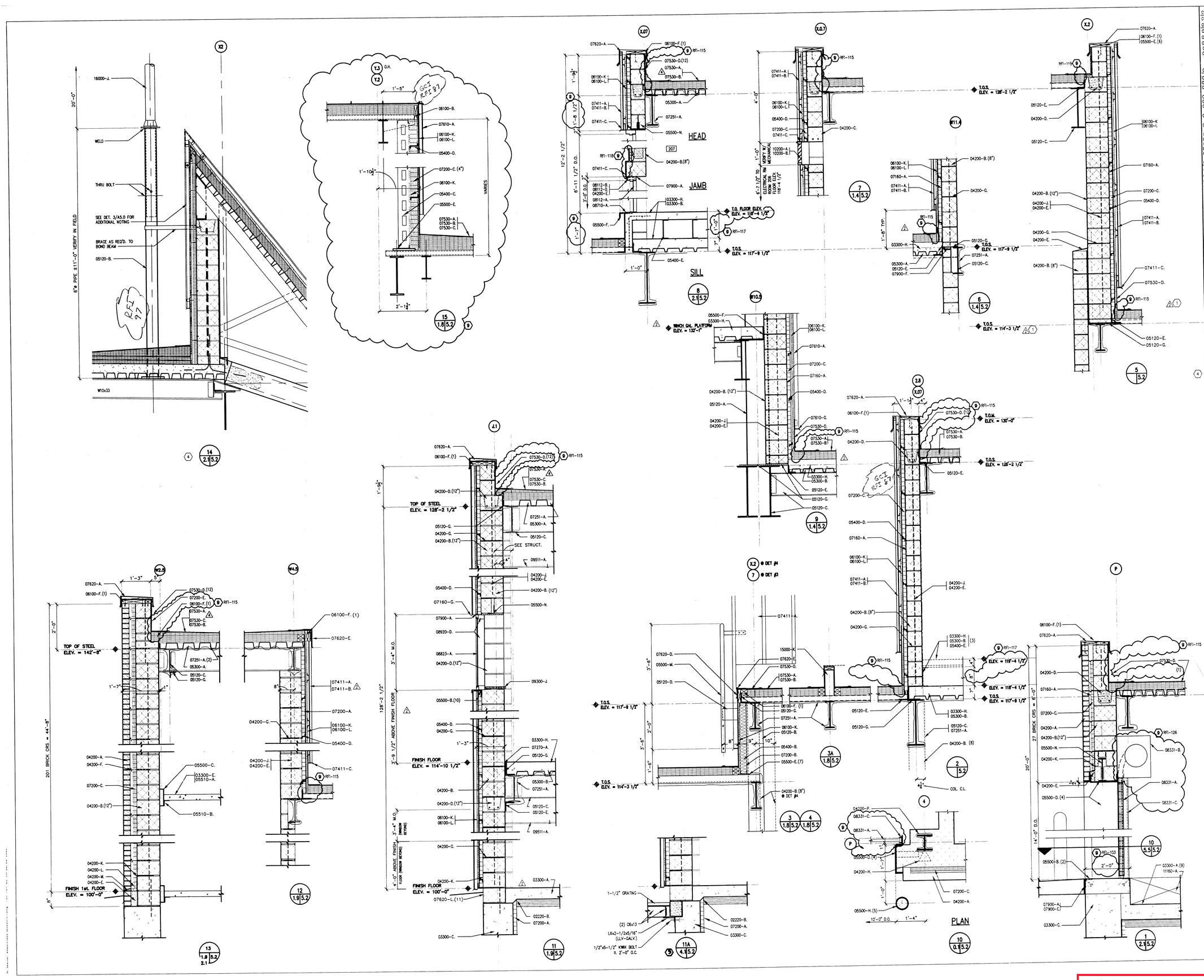

02220 EARTHWORK FOR STRUCTURES

02220-B. GRANULAR FILL MATERIAL

03300 CONCRETE

03300-A. CONCRETE FLOOR SLAB OVER VAPOR BARRIER
03300-B. CONCRETE FOOTING
03300-C. CONCRETE FOUNDATION
03300-E. CONCRETE TREAD FILL W/ REINF.
03300-H. SUPPORTED CONCRETE SLAB

04200 UNIT MASONRY

04200-A. FACE BRICK
04200-B. CMU -NOMINAL 4", 6", 8" AND 12"
04200-C. PRECAST LINTEL (SCORE TO MATCH ADJACENT SURFACES)
04200-D. BOND BEAM WITH REINFORCING
04200-E. GROUT
04200-F. GALVANIZED LADDER TYPE JOINT REINFORCING W/ ADJUSTABLE WIRE ANCHORS @ 16" O.C.
04200-G. GALVANIZED TRUSS TYPE JOINT REINFORCEMENT @ 16" O.C.
04200-H. GALAVANIZED ADJUSTABLE BEAM AND COLUMN ANCHORS
04200-J. VERTICAL BAR REINF. – SEE STRUCTURAL
04200-K. LAMINATED FLASHING
04200-L. CAVITY DRAINAGE MATERIAL
04200-M. WEEP HOLES, 24" O.C.
04200-P. ASPHALT IMPREGNATED BOX

05120 STRUCTURAL STEEL

05120-A. STEEL COLUMN
05120-B. STEEL TUBE COLUMN
05120-C. STEEL BEAM
05120-D. STEEL TUBE BEAM
05120-E. CONT. STEEL ANGLE
05120-G. BENT STEEL PLATE

05300 METAL DECKING

05300-A. ROOF DECK
05300-B. FORM DECK

05400 LIGHT GAGE METAL FRAMING

05400-B. 3 5/8"X 16 GAUGE STUD FRAMING @ 16" O.C.
05400-D. 16 GAGE BENT METAL CLIP ANGLE &/ OR ZEES
05400-E. 10" JOIST FRAMING

05500 METAL FABRICATIONS

05500-B. STEEL ANGLE, GALVANIZED
05500-C. STEEL CHANNEL
05500-D. STEEL CHANNEL, GALVANIZED
05500-E. STEEL BENT PLATE / PLATE
05500-F. STEEL BENT PLATE/ BAR GALVANIZED
05500-H. 6.625"O.D. GALVANIZED STEEL PIPE BOLLARD,FILL WITH CONCRETE
05500-M. STEEL LADDER W/ 1/2" X 2 BAR SIDE RAILS AND 1" DIA. RUNGS 18" LONG @ 12" O.C.
05500-N. LINTEL – SEE STRUCTURAL

05510 METAL STAIRS

05510-A. METAL PAN TREAD AND RISER
05510-B. TREAD AND RISER BAR SUPPORT

06100 CARPENTRY

06100-F. TREATED 2X WOOD BLOCKING / NAILER
06100-K. 3/4" PLYWOOD SHEATHING
06100-L. 30# FELT

07160 BITUMINOUS DAMPPROOFING

07160-A. DAMPROOFING
07160-G. METAL FLASHING

07200 INSULATION

07200-A. 2" PERIMETER RIGID INSULATION, 24" DEEP
07200-B. GLASS FIBER BATT/BLANKET INSULATION
07200-C. 2" RIGID POLYSTYRENE CAVITY INSULATION
07200-E. 1" RIGID POLYSTYRENE INSULATION

07251 SPRAYED ON FIREPROOFING

07251-A. UL RATED SPRAYED ON FIRE PROOFING

07270 FIRE STOPPING

07270-A. SAFING INSULATION

07411 PREFORMED METAL SIDING

07411-A. PREFORMED METAL SIDING, PREFINISHED
07411-B. 7/8" METAL FURRING CHANNELS
07411-C. METAL FLASHING

07530 SINGLE PLY MEMBRANE ROOFING

07530-A. SINGLE PLY MEMBRANE ROOFING (EPDM) FASTENED AND FULLY ADHERED TWO LAYERS OF 2" RIGID BOARD ROOF INSULATION
07530-B. TWO LAYERS OF 2" RIGID BOARD ROOF INSUL.
07530-C. TAPERED ROOF INSULATION
07530-D. MEMBRANE RE-FLASHING (EPDM)

07610 METAL ROOFING AND CLADDING

07610-A. STANDING SEAM (2" HIGH, 18" O.C.)
07610-G. METAL FLASHING

07620 METAL FLASHING AND TRIM

07620-A. COPING WITH CONCEALED SPLICE AND HOLD DOWN RETAINERS, PREFINISHED
07620-E. ALUMINUM GRAVEL STOP
07620-L. TERNCOATED SAINLESS STEEL
07620-M. CONTINOUS RETAINER SUPPORT, PREFINISHED

07900 JOINT SEALERS

07900-A. SEALANT AND BACKING TYPE 1, (EXTERIOR JOINTS, EXCEPT WHERE SUBJECT TO TRAFFIC. INTERIOR MOVEMENT JOINTS, EXCEPT FLOORING. INTERIOR JOINTS AT EXTERIOR WALL
07900-E. PREMOLDED JOINT FILLER
07900-F. PRE-COMPRESSED FOAM EXPANSION FILLER

08112 STANDARD STEEL DOORS AND FRAMES

08112-A. HOLLOW METAL DOOR
08112-B. HOLLOW METAL FRAME
08112-D. MASONRY ANCHORS

08331 ROLLING SERVICE DOORS

08331-A. INSULATED OVERHEAD DOOR
08331-B. OVERHEAD DOOR HOUSING
08331-C. OVERHEAD DOOR TRACK

08710 FINISH HARDWARE

08710-A. ALUMINUM THRESHOLD, SET IN MASTIC

08823 INSULATED GLASS AND GLAZING

08823-A. 1" INSULATED TINTED GLASS UNITS

08920 ALUMINUM WINDOW WALL

08920-D. ALUMINUM WINDOW FRAME (2 X 4 1/2") PREFINISHED

09300 CERAMIC TILE

09300-J. MARBLE WINDOW SILL

09511 ACOUSTICAL CEILING PANELS

09511-A. SUSPENDED ACOUSTICAL PANEL CEILING SYSTEM

10200 ARCHITECTURAL LOUVERS

10200-A. METAL LOUVER – PREFINISHED
10200-B. INSECT SCREEN

11160 LOADING DOCK EQUIPMENT

11160-A. DOCK LEVELER

15000 MECHANICAL

15000-K. EQUIPMENT CURB

NOTE LEGEND

1. 2X TREATED WOOD W/ PRESERVATIVE, BOLTED TO MASONRY OR SECURED TO METAL DECK.
2. L4X4X1/4" W/ CONCRETE ANCHORS @ 2'-0" O.C.
3. BUILT-UP PLATFORM @ DOOR #207
4. C15X33.9 W/ MAS. ANCHORS 2'-0" O.C.
5. 5'-0" HIGH BOLLARD W/ 16" DIA X 5'-0" DEEP CONCRETE FOUNDATION.
6. 16 GA. STEEL PLATE X WIDTH OF WALL
7. CONT. 6X16 GA GALV. STEEL PLATE
8. CMU WALL @ ADJACENT LOCATION
9. SLOPE TO DRAIN.
10. L 4 X 4 X 1/4" EXP. BOLTED TO CMU
11. EXTENDED UP BEHIND METAL PANEL 8" & BELOW GRADE OVER WATERPROOFING 1'-6"
12. EXTEND EPDM FLASHING OVER WOOD NAILER

DiClemente Siegel Design Inc.

Gunnar Birkerts, FAIA Design Counsel

20755 Greenfield Rd Southfield, MI 248.355.1420

Michigan Technological University

Performing Arts and Education Center

Houghton, Michigan

George C. Izenour Associates

Theater Consultant

Stoney Creek, Connecticut

Jay Desai Consulting Engineers, Inc.

Structural Engineers

West Bloomfield, Michigan

Hitch, Inc.

Civil Engineers

Houghton, Michigan

WALL SECTIONS

REVISIONS			
ITEM		DATE	BY
ADDN.	1	4/14/98	KH
ADDN.	2	4/22/98	KH
BULLETIN 1		6/11/98	KH
CONSTR.		6/11/98	KH
BULLETIN 3		4/5/99	KH
BULLETIN 4		6/14/99	KH
BULLETIN 9		11/23/99	KH

DRAWN	S.S.A.
CHECKED	KH
APPROVED	DMC
APPROVED FOR CONST.	KER
DATE	3-17-98
SCALE	3/4" = 1'-0"
PROJECT	970503
	A5.2

FOR REFERENCE ONLY

MICHIGAN TECHNOLOGICAL UNIVERSITY

DOW ENVIRONMENTAL SCIENCES AND ENGINEERING
ROOF SECTION F (SW) ROOF REPLACEMENT

MTU PROJECT P# 08-24-03

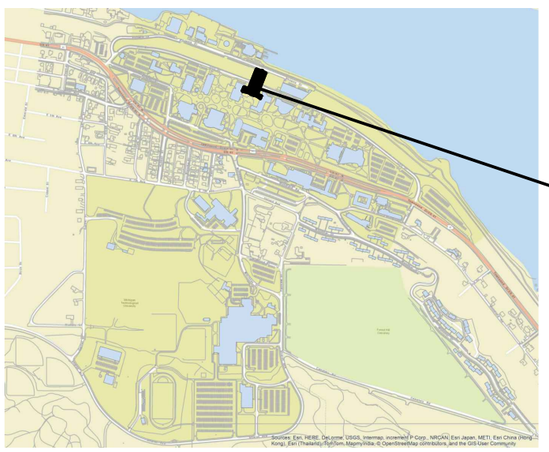

PROJECT LOCATION
DOW ENVIRONMENTAL
SCIENCES AND ENGINEERING
HOUGHTON, MI

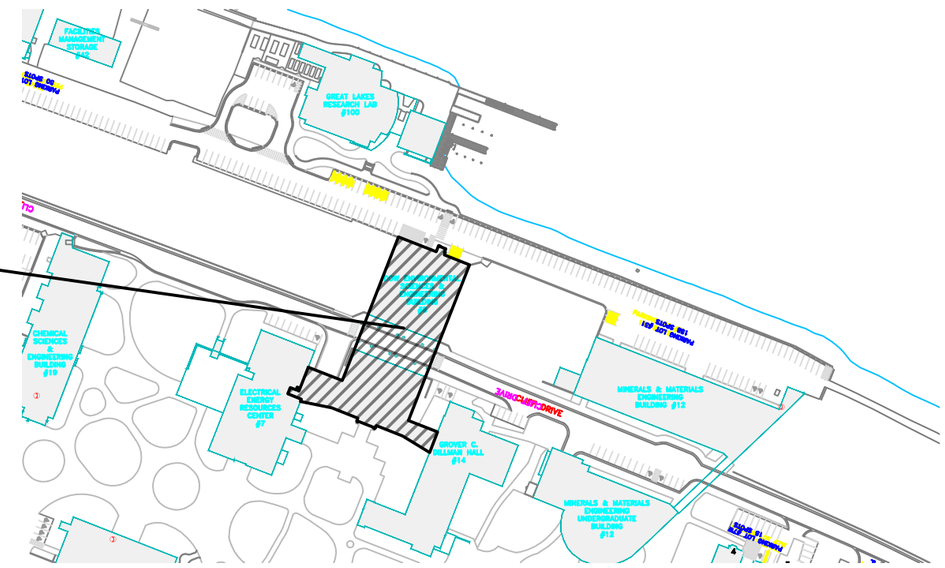

BIDDING

PREPARED BY:

MICHIGAN TECH FACILITIES MANAGEMENT
1400 TOWNSEND DRIVE
HOUGHTON, MI 49931-1295

SHEET LIST	
SHEET NO	SHEET NAME
01	COVER SHEET
02	OVERALL ROOF PLAN
03	ROOF PLAN FOR SECTION F

DOW BUILDING AS BUILT DRAWINGS - REFERENCE ONLY

Michigan Technological University
FACILITIES MANAGEMENT
1400 TOWNSEND DRIVE
HOUGHTON, MICHIGAN
(906) 487-2303 PH
(906) 487-3291 FX

DRAWN BY: JG
DESIGNED: JS
CHECKED: JS
APPROVED: JAG

DOW ENVIRONMENTAL SCIENCES AND ENG BLDG #8
P# 08-24-03
ROOF F (SW) REPLACEMENT
COVER SHEET
BIDDING
3/4/2024

SHEET
01

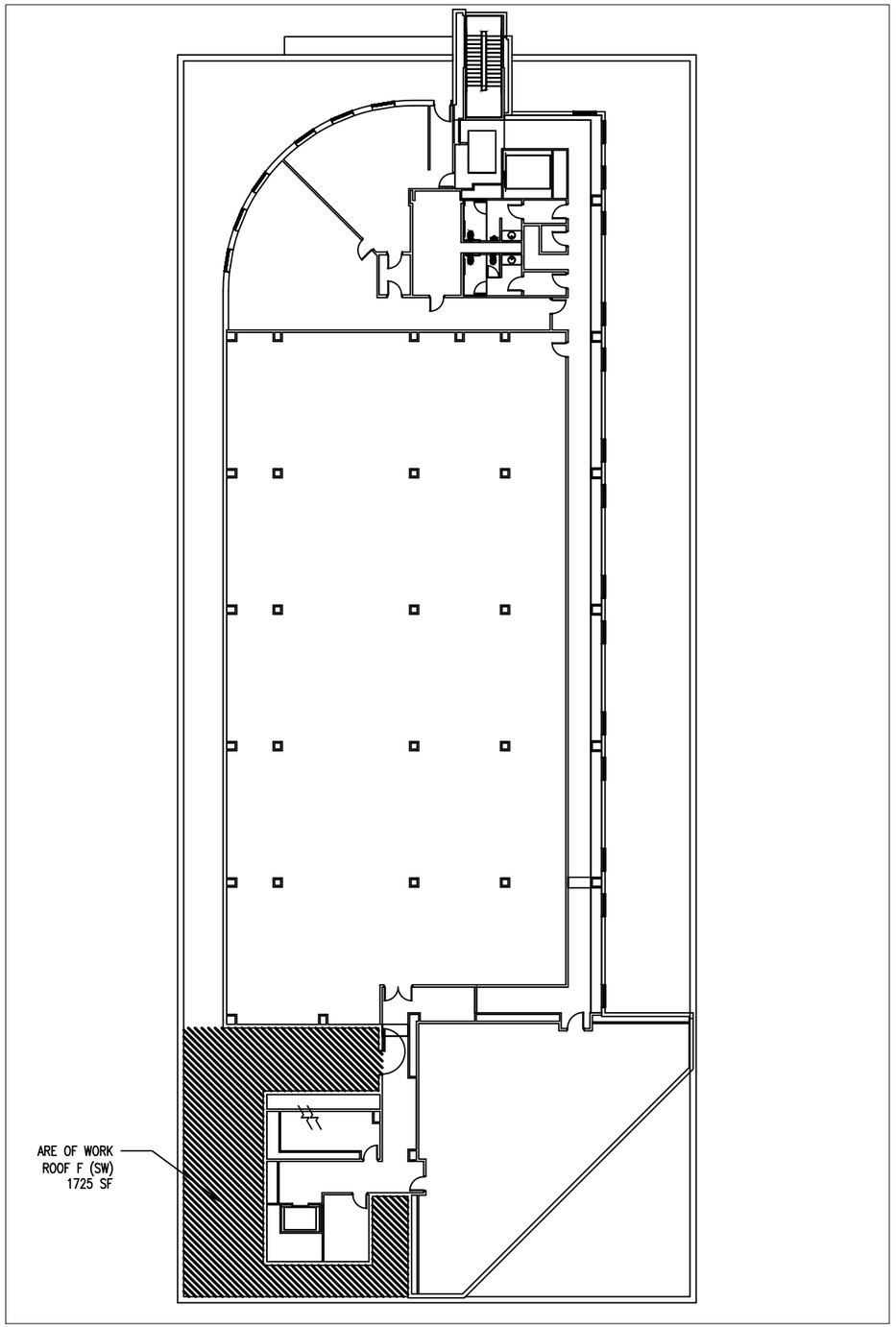

DOW ENVIRONMENTAL SCIENCES & ENG – OVERALL ROOF PLAN

1/32" = 1'-0"

GENERAL SCOPE OF WORK

- CONTRACTOR TO REMOVE AND REPLACE ROOF MEMBRANE, COVER BOARD, AND INSULATION DOWN TO THE CONCRETE/METAL DECK.
- REMOVE AND SALVAGE PARAPET COPING, FASCIA AND/ OR ANY OTHER ROOF EDGE TRIM AT ROOF SECTION F.
- REMOVE AND SALVAGE EXISTING ROOF DRAINS

NORTH

Michigan Technological University
1885
FACILITIES MANAGEMENT
1400 TOWNSEND DRIVE
HOUGHTON, MICHIGAN
(906) 487-2303 PH
(906) 487-3291 FX

DRAWN BY: JG
DESIGNED: JS
CHECKED: JS
APPROVED: JAG

DOW ENVIRONMENTAL SCIENCES AND ENG BLDG #8
P# 08-24-03
ROOF F (SW) REPLACEMENT
OVERALL ROOF PLAN
BIDDING
3/4/2024

SHEET
02

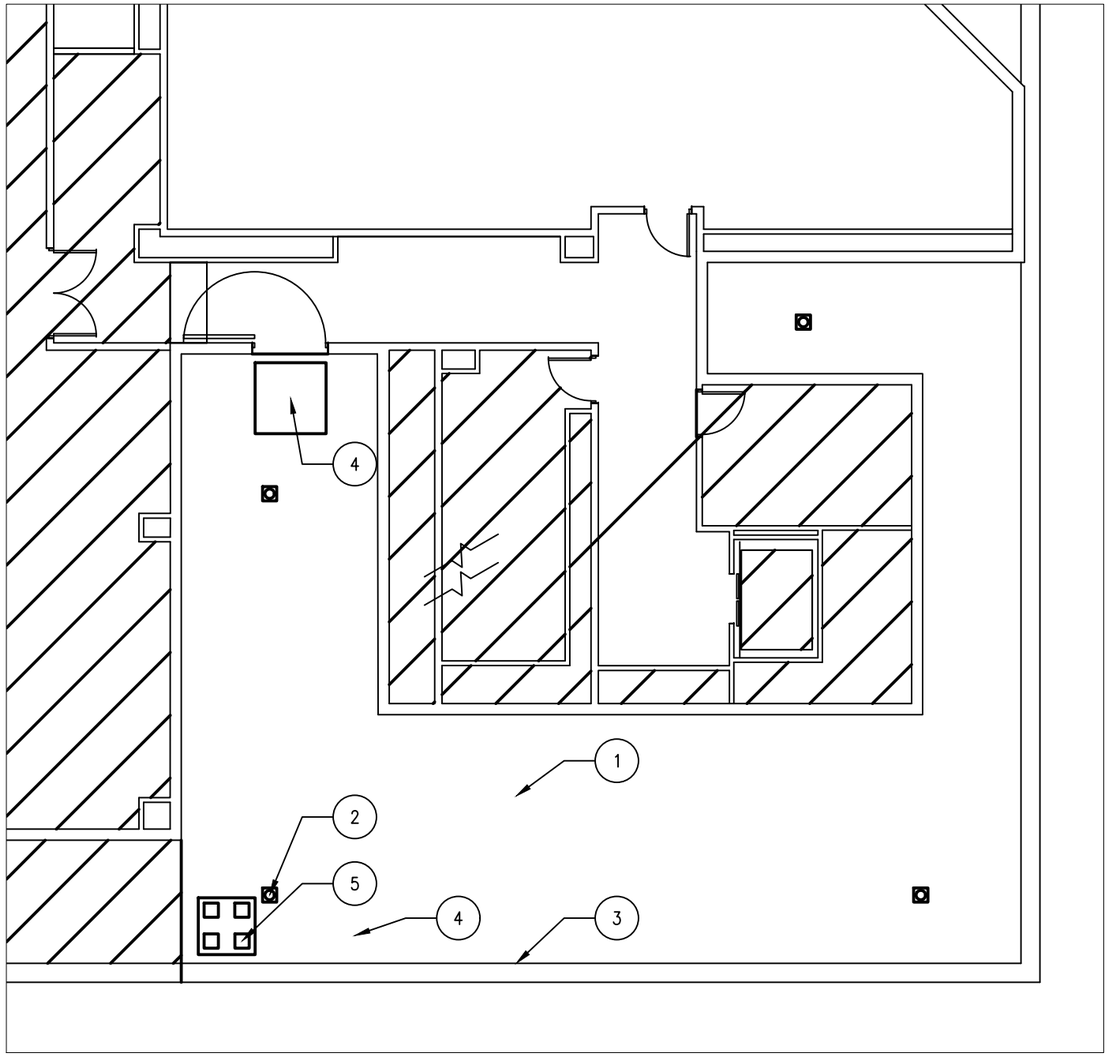

DOW ENVIRONMENTAL SCIENCES & ENG – ROOF PLAN FOR SECTION F

3/32" = 1'–0"

KEY NOTES:

1. CONTRACTOR SHALL REMOVE AND PROPERLY DISPOSE OF EXISTING 60 MIL PVC ROOF MEMBRANE, ROOF INSULATION, AND COVER BOARD. CONTRACTOR SHALL FURNISH AND INSTALL NEW FULLY ADHERED 60 MIL SINGLE PLY ROOF MEMBRANE (OR APPROVED EQUAL), POLYISO ROOF INSULATION TAPERED TO ROOF DRAINS, AND 1/2" SECURSHIELD HD PLUS POLYISO COVER BOARD PER MANUFACTURER'S REQUIREMENTS.
2. EXISTING ROOF DRAINS TO BE REUSED.
3. CONTRACTOR TO REUSE EXISTING STAINLESS STEEL AND ALUMINUM COPING AT PARAPET.
4. CONTRACTOR TO FURNISH AND INSTALL NEW WALKWAY PADS AT ROOF ACCESS ENTRY AND NW CORNER OF ROOF FOR MEMBRANE PROTECTION.
5. REMOVE AND SALVAGE EXISTING PATIO BLOCKS FOR MEMBRANE PROTECTION.

LEGEND:

- ROOF DRAIN
- AREA NOT IN CONTRACT

NORTH

Michigan Technological University
1885
FACILITIES MANAGEMENT
1400 TOWNSEND DRIVE
HOUGHTON, MICHIGAN
(906) 487-2303 PH
(906) 487-3291 FX

DRAWN BY: JG
DESIGNED: JS
CHECKED: JS
APPROVED: JAG

DOW ENVIRONMENTAL SCIENCES AND ENG BLDG #8
P# 08-24-03
ROOF F (SW) REPLACEMENT
ROOF PLAN FOR SECTION F
BIDDING
3/4/2024

SHEET
03

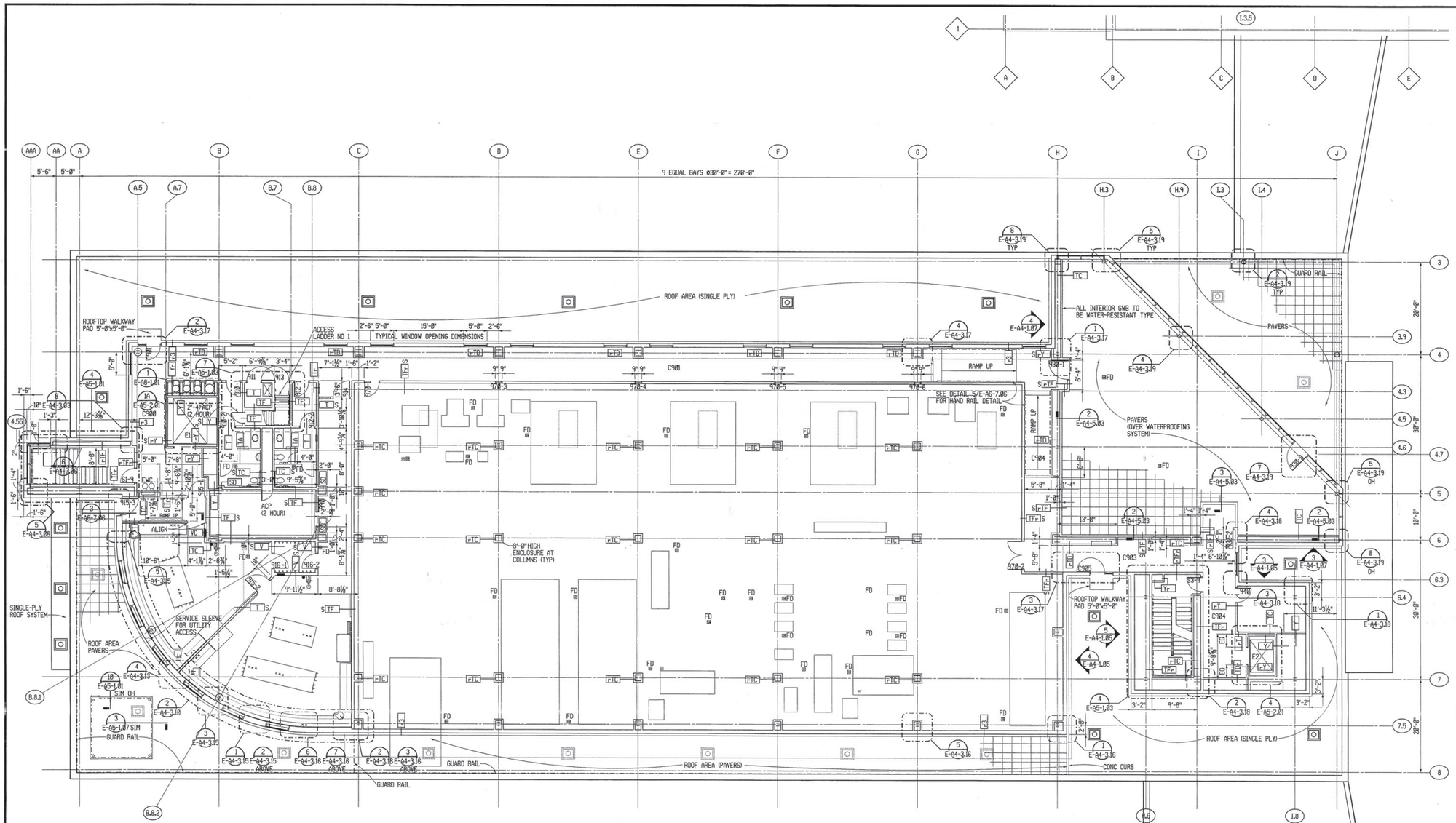

ROOM LEGEND

SPACE NO.	SPACE NAME	PROGRAM NO.	NET SQ. FT.
C900	CORRIDOR		
C901	CORRIDOR		
C902	CORRIDOR		
C903	CORRIDOR		
C904	CORRIDOR		
C905	CORRIDOR		
E1	ELEVATOR NO. 1		
E2	ELEVATOR NO. 2		
S1-9	STAIR NO. 1		
S3-9	STAIR NO. 3		
910	MEN'S TOILET ROOM		183
911	CUSTODIAL CLOSET	FM2	32
912	WOMEN'S TOILET ROOM		164
913	ACCESS LADDER NO 1		
914	ATMOSPHERIC SCIENCES LAB	CE2	1166
915	AIR QUALITY ENGINEERING LAB	CE1	754
916	SUPPLY ROOM		60
930	GREENHOUSE	BL43	2271
940		FM8	146
970	MECHANICAL ROOM		10963
990	UTILITY SPINE		

GENERAL NOTES

1. REFER TO DRAWING E-AA-01 FOR ARCHITECTURAL LEGEND, ABBREVIATIONS & SYMBOLS.
2. REFER TO THE STRUCTURAL DRAWINGS (E-S SERIES) FOR DESIGN LOADS OF FLOORS & ROOFS.
3. REFER TO COMPOSITE PLANS/LIFE SAFETY PLANS (E-AX SERIES) FOR RATED PARTITIONS.
4. REFER TO DRAWING E-A6-1.01 FOR PARTITION TYPES.
5. REFER TO THE EQUIPMENT DRAWINGS (E-AQ SERIES) FOR CASEWORK, CONTROLED ENVIRONMENT ROOMS, EQUIPMENT & MISCELLANEOUS SPECIALITIES.

STATE OF MICHIGAN
DEPARTMENT OF MANAGEMENT AND BUDGET
Office of Facilities

MICHIGAN TECHNOLOGICAL UNIVERSITY

SH&G
Smith, Hinchman & Grylls
Associates Inc.
Architects Engineers
Planners

ENVIRONMENTAL SCIENCES & ENGINEERING BUILDING
NINTH FLOOR PLAN

ISSUED FOR
SD REVIEW 10-26-01
DD REVIEW 12-21-01
CD REVIEW 3-29-02
BID 6-21-02
BULLETIN NO 1 8-05-02
BULLETIN NO 2 8-26-02

DESIGNED
DRAWN
CHECKED
APPROVED

DATE 03-26-02

ISSUED FOR
☐ PRELIMINARY
☐ CONSTRUCTION
☑ BID

IDENTIFICATION NO.
PROJECT 1003L00
INDEX NUMBER 1000, 1001 & 1002
03-27-2002 9:00pm
E3003000.200000 03-27

SCALE 1/8" = 1'-0"

SHEET NO. E-A2-9

© Copyright SH&G

FOR REFERENCE ONLY

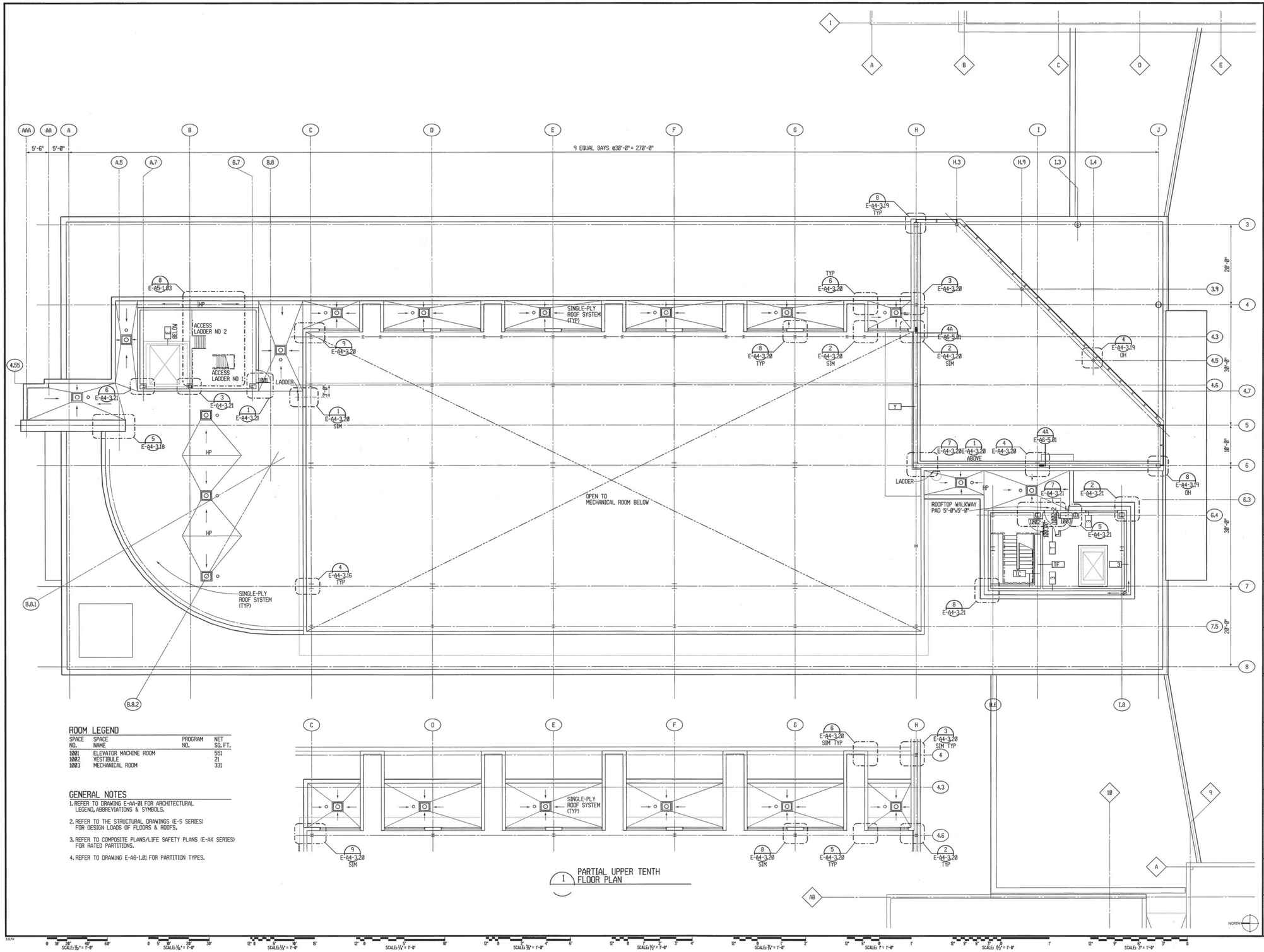

ROOM LEGEND

SPACE NO.	SPACE NAME	PROGRAM NO.	NET SQ. FT.
1001	ELEVATOR MACHINE ROOM		551
1002	VESTIBULE		21
1003	MECHANICAL ROOM		331

GENERAL NOTES

1. REFER TO DRAWING E-AA-01 FOR ARCHITECTURAL LEGEND, ABBREVIATIONS & SYMBOLS.
2. REFER TO THE STRUCTURAL DRAWINGS (E-S SERIES) FOR DESIGN LOADS OF FLOORS & ROOFS.
3. REFER TO COMPOSITE PLANS/LIFE SAFETY PLANS (E-AX SERIES) FOR RATED PARTITIONS.
4. REFER TO DRAWING E-A6-1.01 FOR PARTITION TYPES.

1 PARTIAL UPPER TENTH FLOOR PLAN

STATE OF MICHIGAN
DEPARTMENT OF MANAGEMENT AND BUDGET
Office of Facilities

MICHIGAN TECHNOLOGICAL UNIVERSITY
HOUGHTON, MI

SH&G
Smith Hinchman & Grylls
Associates Inc.
Architects Engineers
Planners

ENVIRONMENTAL SCIENCES & ENGINEERING BUILDING
TENTH FLOOR PLAN & PARTIAL UPPER TENTH FLOOR PLAN

ISSUED FOR

ISSUED FOR
BID SET

ISSUED FOR
90% REVIEW 8-25-06
95% REVIEW 9-22-06
100% 10-13-06
BIDDING SET 10-20-06

DESIGNED
DRAWN
CHECKED
APPROVED

DATE 03-26-08

ISSUED FOR
PRELIMINARY
CONSTRUCTION
FINAL RECORD

IDENTIFICATION NO.
PROJECT 1800L00
INDEX NUMBER 1000L1000 & 3000

SCALE 1/8" = 1'-0"

SHEET NO. E-A2-10

18-OCT-2007 bengoda

FOR REFERENCE ONLY

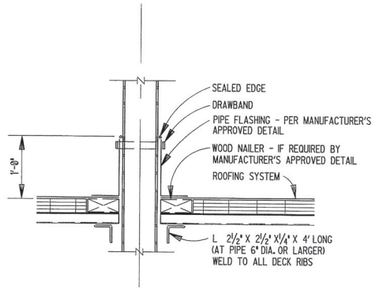

9 PIPE FLASHING
E-A4-8.01

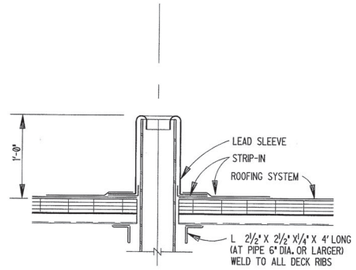

8 VENT FLASHING
E-A4-8.01

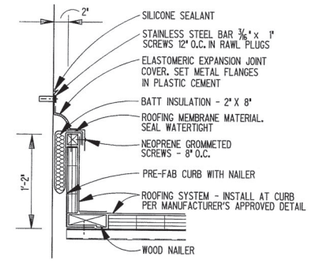

7 EXPANSION JOINT
E-A4-8.01

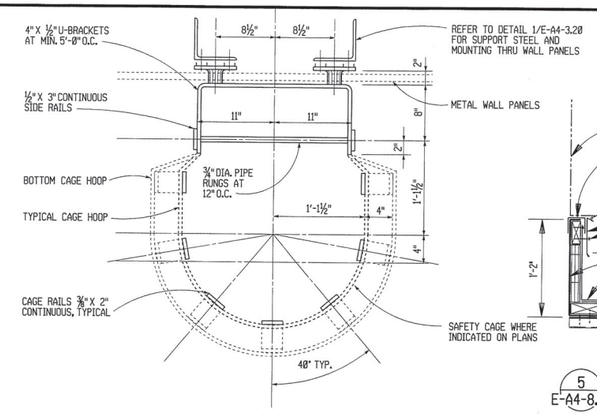

6 LADDER AND CAGE DETAIL
E-A4-8.01

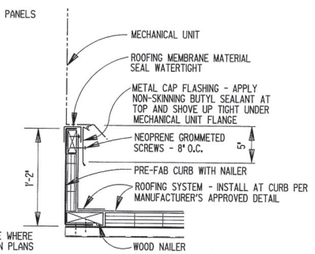

5 ROOF CURB
E-A4-8.01

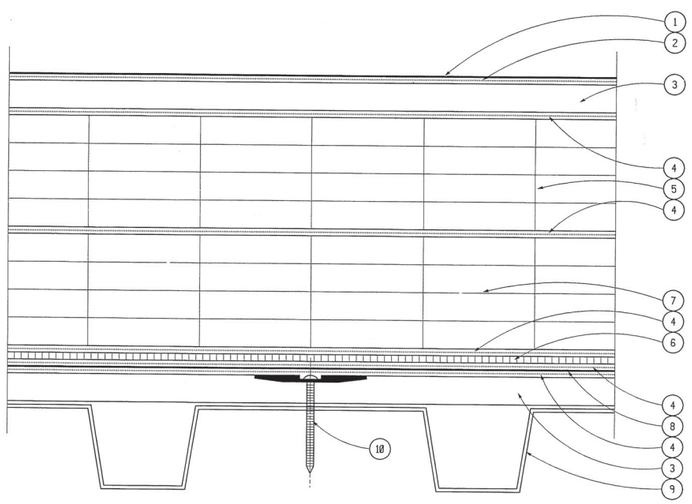

10 SINGLE-PLY ROOF SYSTEM
E-A4-8.01

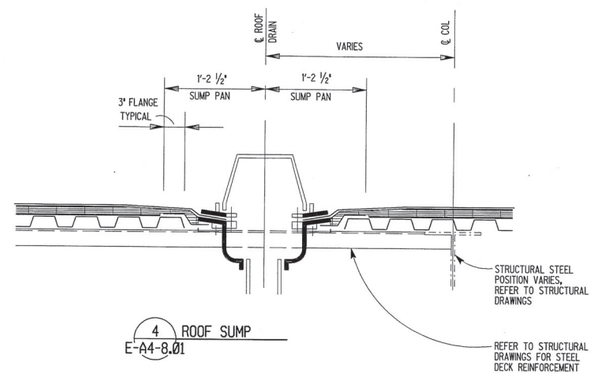

4 ROOF SUMP
E-A4-8.01

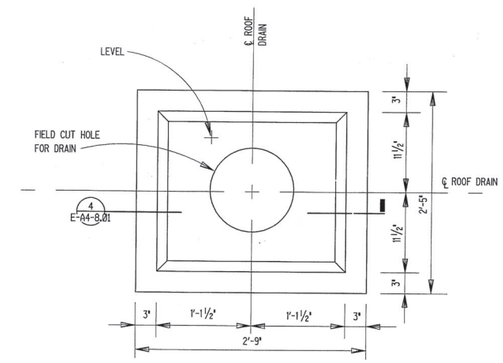

3 ROOF SUMP PAN
E-A4-8.01

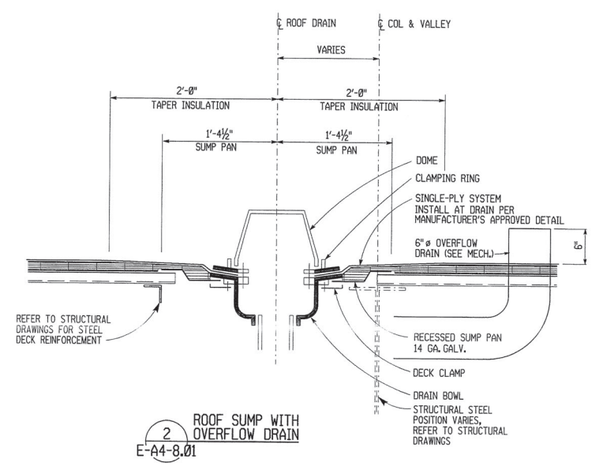

2 ROOF SUMP WITH OVERFLOW DRAIN
E-A4-8.01

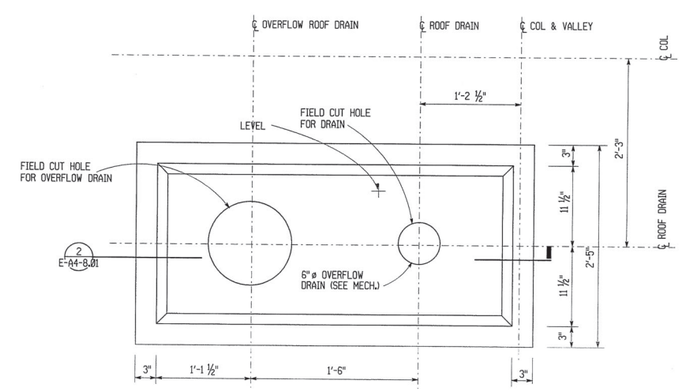

1 ROOF SUMP PAN AT OVERFLOW DRAINS
E-A4-8.01

KEYNOTES

1. SINGLE-PLY ROOF MEMBRANE
2. SINGLE-PLY MEMBRANE ADHESIVE
3. ½" OVERLAY BOARD
4. LAURENCO ADHESIVE
5. EXTRUDED POLYSTYRENE TAPPERED INSULATION
6. PROTECTION BOARD
7. EXTRUDED POLYSTYRENE BASE INSULATION
8. VAPOR RETARDER MEMBRANE
9. METAL ROOF DECK
10. FASTENER AND DISK

FOR REFERENCE ONLY

STATE OF MICHIGAN
DEPARTMENT OF MANAGEMENT AND BUDGET
Office of Facilities

MICHIGAN TECHNOLOGICAL UNIVERSITY
HOUGHTON, MICHIGAN 1931

SH&G
Smith, Hinchman & Grylls Associates Inc.
Architects Engineers Planners

ENVIROMENTAL SCIENCES & ENGINEERING BUILDING
ROOFING DETAILS

ISSUED FOR	

ISSUED FOR	

ISSUED FOR	
90% REVIEW	8-25-06
100% REVIEW	9-27-06
BID SET	10-27-06

DESIGNED	
DRAWN	W. JENSEN
CHECKED	
APPROVED	
DATE	03-30-06

ISSUED FOR: ☐ PRELIMINARY ☐ CONSTRUCTION ■ FINAL RECORD

15-OCT-2022 bongham

IDENTIFICATION NO.
PROJECT: 1650-1.00
INDEX NUMBER: 10160, 12015 & 12052
0614
0.0000000.0000000

SCALE: 1½" = 1'-0"

SHEET NO. E-A4-8.01

contgroup\EARBUILDA