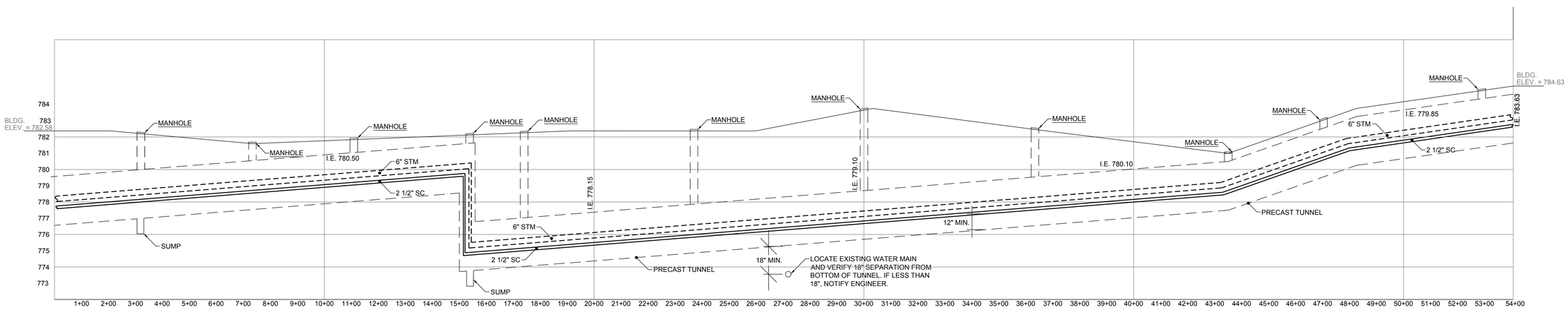

PROFILE VIEW

SCALE: 1" = 1'-0"

SCALE: 1" = 6"

Tunnel - 4' Wide x 3' High

Advance Concrete Products Company (800) 824-8351 (248) 887-4173 Fax: (248) 887-2755

All Concrete Shall Have A 28 Day Compressive Strength Of 4500 PSI.

Reinforcing Steel Shall Comply With ASTM A615 Grade 60 Rebar. Bar Bending And Placement Shall Comply With The Latest ACI Standards.

Standard Structural Design Based On AASHTO HS 20 Wheel Loading.

1" Ø Butyl Rubber Rope Mastic Is Provided For Placement Between Each Section.

This Drawing Shows A Sample. We Can Manufacture Tunnels To Meet Your Requirements.

Available Options -
Varying Lengths & Heights
Embedded Steel Plates Or Inserts
Aluminum Access Hatches
Cast Iron Frames & Covers
Custom Opening Locations
Design for Increased Loading Conditions
Secondary Polypropylene Fiber Reinforcement

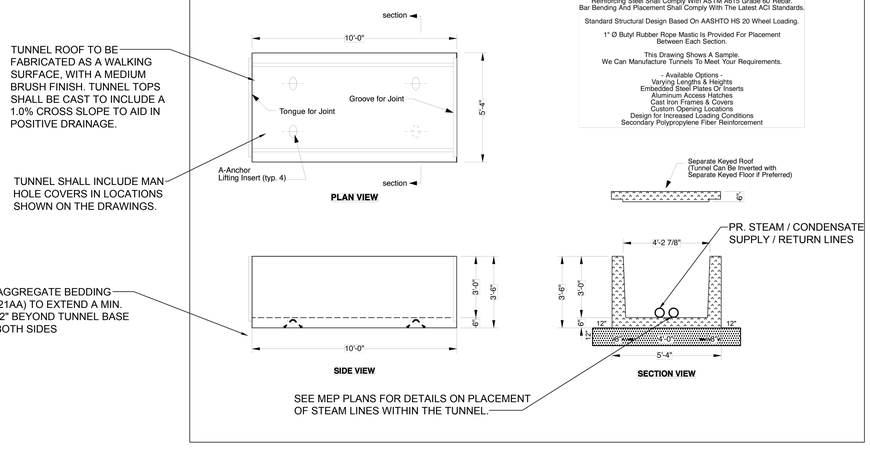

UTILITY LOCATION:

THE CONTRACTOR SHALL INCLUDE A THIRD PARTY GPR AND EXISTING UTILITY LOCATION SERVICE IN ALL WORK ZONES TO DETERMINE EXISTING LOCATIONS OF BELOW GRADE UTILITIES. ANY DAMAGED LINES SHALL BE REPAIRED AS SOON AS IS POSSIBLE (WITHIN HOURS OF A FOUND BREAK). ANY DAMAGE TO EXISTING UTILITIES WILL BE REPAIRED AT THE CONTRACTORS EXPENSE.

PROJECT RESTORATION:

REMOVAL / REPLACEMENT OF HARD SURFACES (WALKS, DRIVES AND MISCELLANEOUS PAVEMENTS) HAVE BEEN OUTLINED BASED UPON ANTICIPATED DISRUPTION. CONTRACTOR SHALL BE RESPONSIBLE FOR ALL DAMAGED HARD SURFACE AND GREEN SPACE. PAVEMENT REPAIR CROSS SECTIONS ARE INCLUDED. GREEN SPACE RESTORATION SHALL INCLUDE 4" SCREENED TOPSOIL AND HYDROSEED. NOTE THE SEASONAL LIMITATIONS FOR HOT MIX ASPHALT APPLICATIONS AND PLAN ACCORDINGLY. INCLUDE IN SCHEDULE AND SUBMIT.

OPEN EXCAVATIONS / TEMP. CHAIN LINK FENCE / STEEL PLATES:

ALL TUNNEL EXCAVATIONS SHALL BE EITHER BACKFILLED TO ROUGH FINISH GRADE OR A MOVEABLE CHAIN LINK FENCE / STEEL PLATES SHALL ENCLOSE OR COVER ANY AREAS WHEN CONTRACTORS LEAVE FOLLOWING THE WORK DAY. FENCING SHALL NOT IMPEDE REQUIRED WALKING PATHS FOR DOC INMATES OR STAFF.

PROJECT PHASING:

THE CONTRACTOR SHALL PREPARE A PHASING PLAN, FOLLOWING AWARD OF THE PROJECT, FOR PRESENTATION TO THE OWNER TEAM FOR REVIEW AND APPROVAL. THIS PLAN SHALL ACHIEVE THE REQUIREMENTS NOTED IN THIS PLAN, TO ALLOW FOR CONTINUED OPERATION AND PRISON MOVEMENT IN THE WORK ZONE.

EXCAVATED SOIL PLACEMENT:

CONTRACTOR SHALL COORDINATE WITH FACILITY STAFF FOR LOCATIONS ON THE PRISON PROPERTY WHERE SOILS EXCAVATED FOR THE TUNNEL MAY BE TRANSPORTED, GRADED AND RESTORED.

TUNNEL ALIGNMENT:

CONTRACTOR SHALL PROVIDE A LAYING SCHEDULE / PLAN, PRIOR TO EXCAVATION, BASED UPON THE LOCATIONS OF PROPOSED ALIGNMENT, SHOWING ALL TUNNEL SECTIONS, MANNER IN WHICH BENDS ARE ACCOMMODATED, VERTICAL CHANGES IN TUNNEL DEPTHS, LOCATIONS OF PROPOSED TUNNEL FIELD CUTTING, ETC.

TUNNEL / BUILDING CONNECTIONS:

SEE MATRIX DRAWINGS FOR DETAILS ON CONNECTION OF UTILITY TO BUILDING BASEMENT WALLS.

PAVING LEGEND

- PROPOSED CONCRETE PAVEMENT
- PROPOSED ASPHALT PAVEMENT
- PROPOSED PAVEMENT REPLACEMENT

LEGEND

- EXISTING SANITARY SEWER
- SAN. CLEAN OUT
- EXISTING WATERMAIN
- EXISTING STORM SEWER
- EX. R. Y. CATCH BASIN
- EX. U.G. STEAM LINE
- EXISTING BURIED CABLES
- OVERHEAD LINES
- LIGHT POLE
- SIGN
- EXISTING GAS MAIN
- PR. SANITARY SEWER
- PR. WATER MAIN
- PR. STORM SEWER
- PR. R. Y. CATCH BASIN
- PR. STEAM TUNNEL
- PROPOSED LIGHT POLE
- TC 600.00 — PR. TOP OF CURB ELEVATION
- GU 600.00 — PR. GUTTER ELEVATION
- TW 600.00 — PR. TOP OF WALK ELEVATION
- TP 600.00 — PR. TOP OF PVMT. ELEVATION
- FG 600.00 — FINISH GRADE ELEVATION

issue date
4/14/2023 CD SET

checked by

drawn by
GLM

consultant
BTT

MATRIX CONSULTING ENGINEERS, INC
901 E. CESAR E. CHAVEZ AVE PHONE: 517.487.2511
LANSING, MI 48906 FAX: 517.487.2544
MATRIX PROJECT ID2229500 WEB: www.matrixcm.com

CHIPPEWA CORRECTIONAL FACILITY –
STEAM AND STEAM CONDENSATE TUNNEL PROJECT
4269 W M 80 KINCHELOE, MI 49788

STATE OF MICHIGAN
DEPARTMENT OF TECHNOLOGY, MANAGEMENT AND BUDGET
STATE FACILITIES ADMINISTRATION
DESIGN AND CONSTRUCTION DIVISION
ADAM P. LACH, RA, DIRECTOR

sheet description
CIVIL SITE PLAN - SOIL PROFILE NEW

file no.
472/22138.ABG

funding code
---

contract order no.

consultant job no.
22295.00

SHEET NUMBER
C-700

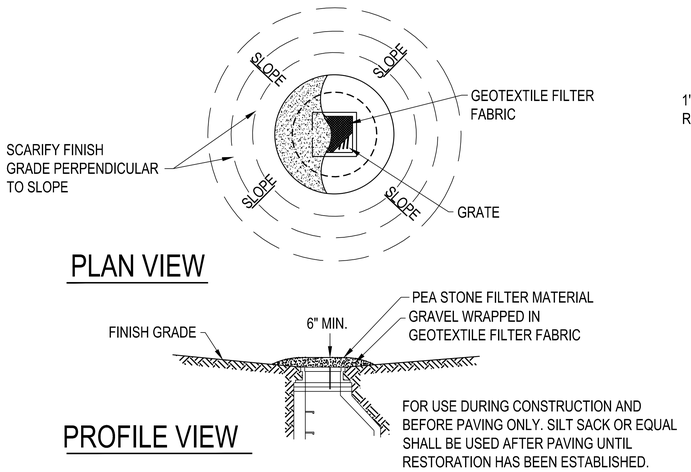

1 LOW POINT INLET DETAIL

SCALE: NTS

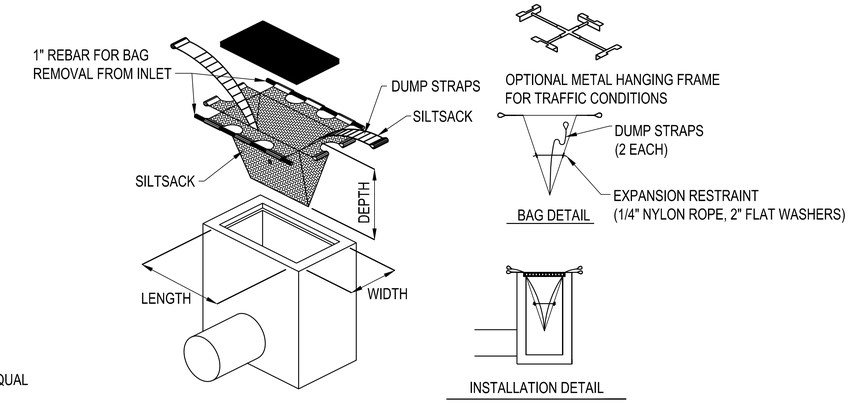

2 SILT SAND FILTER DETAIL

SCALE: NTS

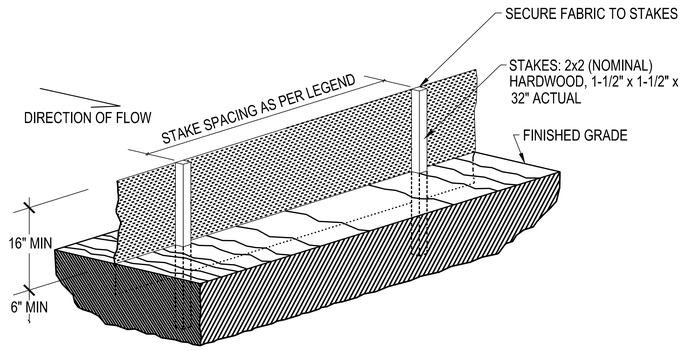

1. SILT FENCE SHALL BE CONSTRUCTED BEFORE UPSLOPE GROUND COVER IS REMOVED. CLEARING, GRUBBING, AND STUMPING CAN OCCUR BEFORE SILT FENCE INSTALLATION IF GROUND COVER IS NOT REMOVED.
2. ALL SILT FENCE SHALL BE PLACED AS CLOSE TO THE CONTOUR AS POSSIBLE SO THAT WATER WILL NOT CONCENTRATE AT LOW POINTS IN THE FENCE AND SO TAHT SMALL SWALES OR DEPRESSIONS THAT MAY CARRY SMALL CONCENTRATED FLOWS TO THE SILT FENCE ARE DISSIPATED ALONG ITS LENGTH.
3. ENDS OF THE SILT FENCES SHALL BE BROUGHT UPSLOPE SLIGHTLY SO THAT WATER PONDED BY THE SILT FENCE WILL BE PREVENTED FROM FLOWING AROUND THE ENDS.
4. SILT FENCE SHOULD PREFERABLY BE A MINIMUM OF 10 FEET FROM THE TOP OF SLOPE.
5. THE TRENCH SHALL BE MADE WITH A TRENCHER, CABLE LAYING MACHINE, SLICING MACHINE, OR OTHER SUITABLE DEVICE THAT WILL ENSURE AN ADEQUATELY UNIFORM TRENCH DEPTH.
6. WHERE TWO SECTIONS OF PREFABRICATTED SILT FENCE ARE COMBINED INTO ONE RUN, THE END POSTS SHALL BE CONNECTED TOGETHER, NOT SIMPLY OVERLAPPED.
7. SILT FENCE SHALL ALLOW RUNOFF TO PASS ONYL AS DIFFUSE FLOW THROUGH THE GEOTEXTILE. IF RUNOFF OVERTOPS THE SILT FENCE, FLOWS AROUND THE ENDS, OR IN ANY OTHER WAY BECOMES A CONCENTRATED FLOW, ONE OF THE FOLLOWING SHALL BE PERFORMED, AS APPROPRIATE: A) AN ADDITIONAL RUN OF SILT FENCE SHALL BE PLACED UPSTREAM, B) THE LAYOUT OF THE SILT FENCE SHALL BE CHANGED, C) ACCUMULATED SEDIMENT SHALL BE REMOVED, OR D) OTHER PRACTICES SHALL BE IMPLEMENTED.
8. SEDIMENT DEPOSITS SHALL BE REMOVED WHEN THE DEPOSIT REACHES APPROXIMATELY ONE-HALF OF THE HEIGHT OF THE SILT FENCE.
9. ALL STOCKPILES SHALL BE INCIRCLED WITH SILT FENCE.
10. SILT FENCE FABRIC SHALL MEET THE FOLLOWING SPECIFICATIONS: MINIMUM TENSILE STRENGTH 120 LBS., ASTM D 4632; MAXIMUM ELONGATION AT 60 LBS., 15%, ASTM D 4632; MINIMUM PUNCTURE STRENGTH 50 LBS., ASTM D 4833; MINIMUM TEAR STRENGTH 40 LBS., ASTM D 4533; APPARENT OPENING SIZE <= 0.84MM, ASTM D 4751; MINIMUM PERMITTIVITY 1X10-2SEC.-1, ASTM D 4491; WATER FLOW RATE 15 GAL./MIN/SQ. FT.; UV EXPOSURE STRENGTH RETENTION, 70%, ASTM G 4355.

3 SILT FENCE DETAIL

SCALE: NTS

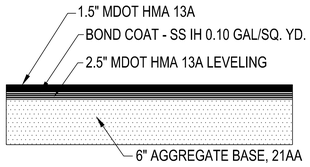

4 ASPHALT PAVEMENT DETAIL

SCALE: NTS

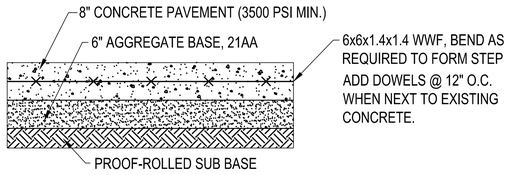

5 CONCRETE PAVEMENT DETAIL

SCALE: NTS

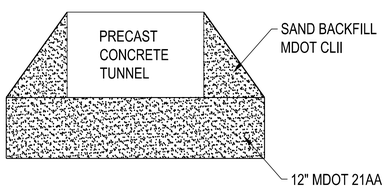

6 TRENCH DETAIL

SCALE: NTS

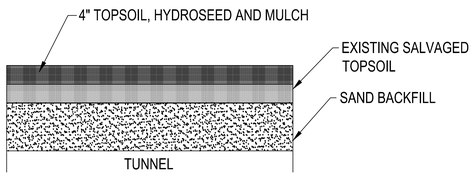

7 LAWN RESTORATION DETAIL

SCALE: NTS

issue date
4/14/2023 CD SET

checked by

drawn by
GLM

consultant
BTT

MATRIX CONSULTING ENGINEERS, INC
901 E. CESAR E. CHAVEZ AVE
LANSING, MI 48906
MATRIX PROJECT 22295.00
PHONE: 517.487.2511
FAX: 517.487.2544
WEB: www.matrixcm.com

CHIPPEWA CORRECTIONAL FACILITY –
STEAM AND STEAM CONDENSATE TUNNEL PROJECT
4269 W M 80
KINCHELOE, MI 49788

STATE OF MICHIGAN
DEPARTMENT OF TECHNOLOGY, MANAGEMENT AND BUDGET
STATE FACILITIES ADMINISTRATION
DESIGN AND CONSTRUCTION DIVISION
ADAM P. LACH, RA, DIRECTOR

sheet description
CIVIL DETAILS

file no.
472/22138.ABG
funding code
---
contract order no.
consultant job no.
22295.00

SHEET NUMBER
C-800

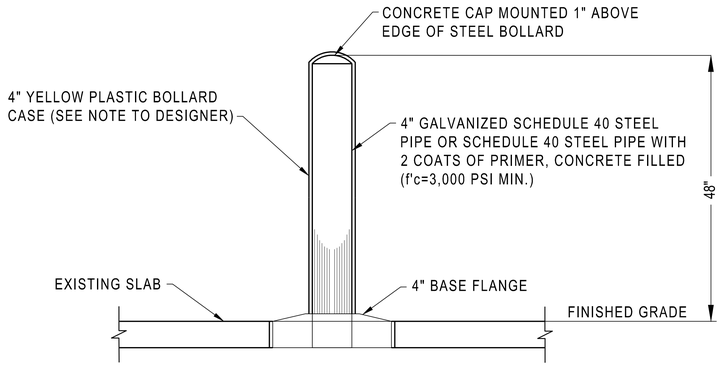

8 BOLLARD DETAIL

SCALE: NTS

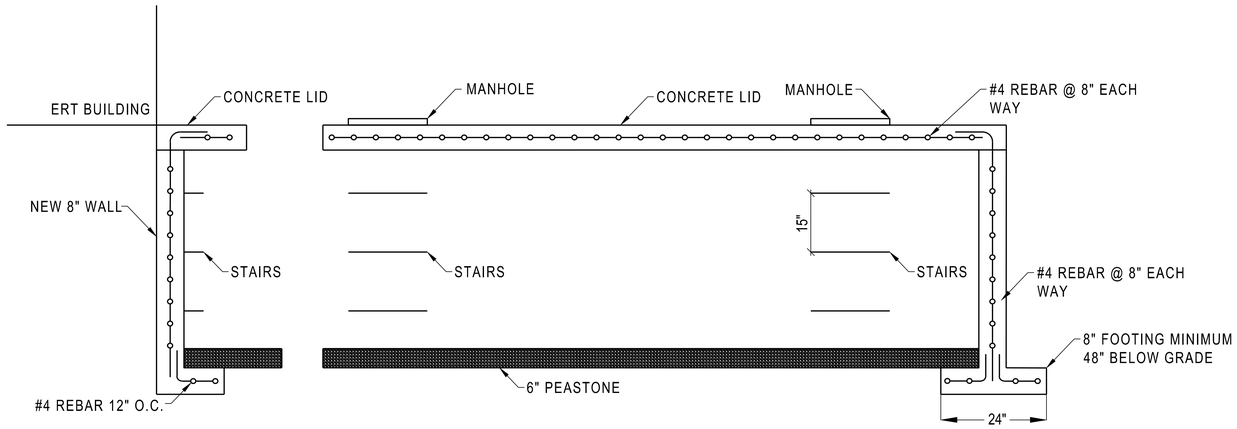

11 FOOTING DETAIL

SCALE: NTS

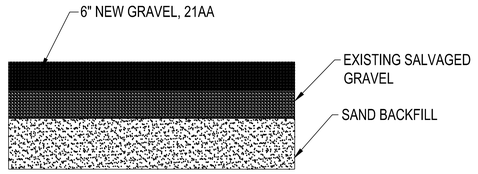

9 GRAVEL RESTORATION DETAIL

SCALE: NTS

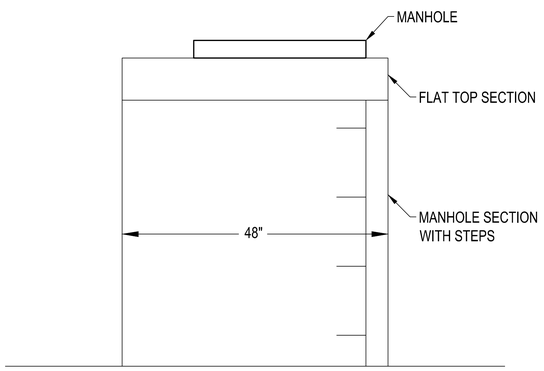

CONCRETE TUNNEL

10 MANHOLE EXTENDER DETAIL

SCALE: NTS

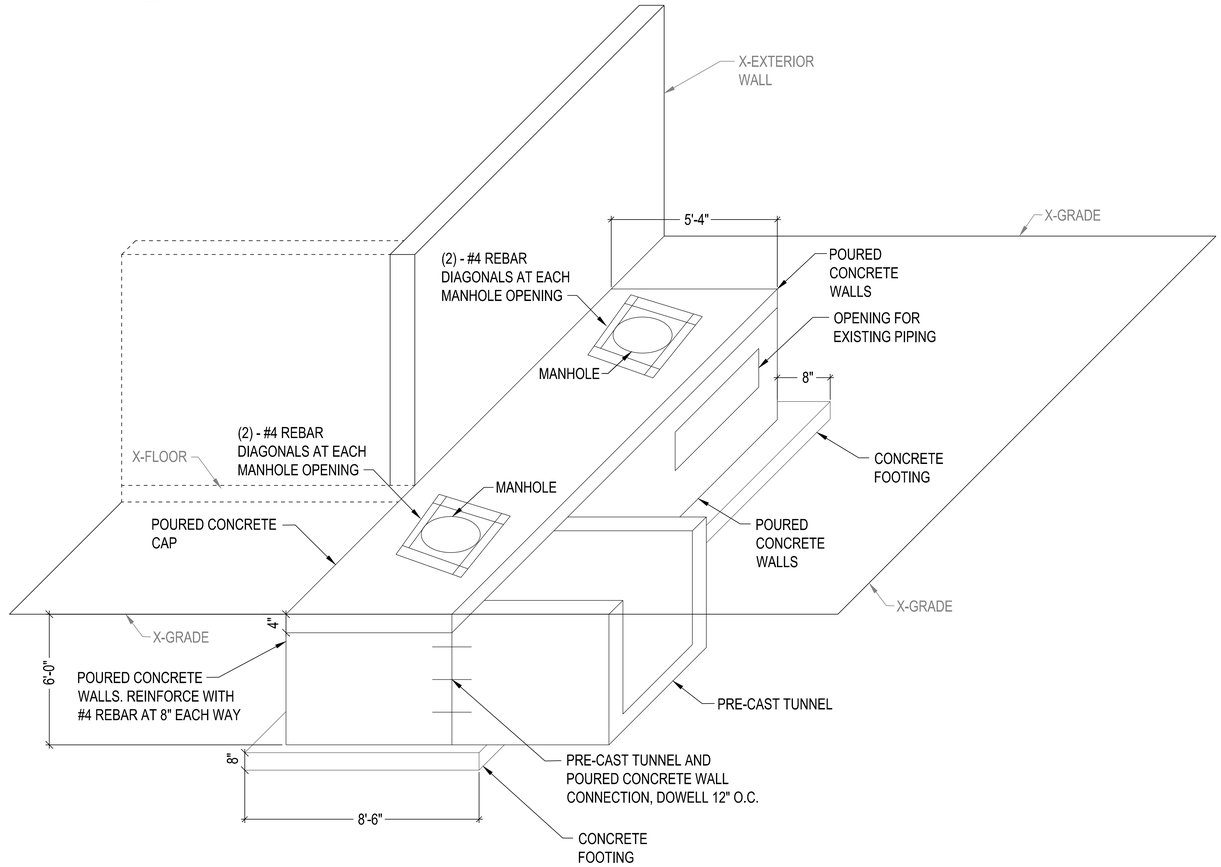

12 TUNNEL CONNECTION DETAIL

SCALE: NTS

issue date
4/14/2023 CD SET

checked by
GLM

drawn by
BTT

consultant

MATRIX
CONSULTING ENGINEERS, INC
901 E. CESAR E. CHAVEZ AVE
LANSING, MI 48906
MATRIX PROJECT 22295.00
PHONE: 517.487.2511
FAX: 517.487.2544
WEB: www.matrixcon.com

CHIPPEWA CORRECTIONAL FACILITY –
STEAM AND STEAM CONDENSATE TUNNEL PROJECT
4269 W M 80
KINCHELOE, MI 49788

STATE OF MICHIGAN
DEPARTMENT OF TECHNOLOGY, MANAGEMENT AND BUDGET
STATE FACILITIES ADMINISTRATION
DESIGN AND CONSTRUCTION DIVISION
ADAM P. LACH, RA, DIRECTOR

sheet description
CIVIL DETAILS

file no.
472/22138.ABG
funding code
---
contract order no.
consultant job no.
22295.00

SHEET NUMBER
C-801