Request for Proposals

Hangar 661 Concrete Floor Repair and Replacement

Sawyer International Airport

The County of Marquette (County), Sawyer International Airport, seeks proposals from qualified firms for repair/replacement of sections of the concrete floor for Hangar 661. Proposals must be received no later than 10:00 a.m. EST, Friday, March 29th, 2023. Contractors shall submit the documents using the **Proposal Form** contained in this Request for Proposal (RFP) by mail or in person in a sealed envelope, which identifies the proponent and states "Hangar 661 Concrete Floor Repair and Replacement for Sawyer International Airport" on the outside of the envelope. Proposals must be delivered to: Sawyer Services Center, 125 G Avenue, Gwinn, Michigan 49841. Proposals will be publicly opened and read aloud at 125 G. Ave. Gwinn, MI 49841 at the date and time specified below.

Schedule of Events

March 3, 2023	RFP issued
March 10, 2023 10:00am	Optional Pre-Bid Meeting
March 17, 2023	Questions Due from Bidders
March 22, 2023	Addendum issued (If required) *All addendums and RFP documents will be posted on the County of Marquette and Sawyer International Airport's websites.
March 29, 2023	DUE DATE FOR RFQ (Bid Opening Immediately After) Opening of Bids @ 10:00am EST *Responses received after the deadline cannot be considered and if mailed,will be returned unopened.* *METHOD OF SUBMITTAL*: By mail or delivered in person.

Although every effort will be made to follow this schedule, the County reserves the right to modify the dates as necessary and to accommodate special circumstances. All RFPs are due by the time specified. Any RFP received at the designated location after the required time and date specified for receipt shall be considered late and non-responsive. The County is not responsible for delays occasioned by the US Postal Service, the internal mail delivery system of the county, or any other delivery method employed by the Vendor.

Background/Scope of Work

The County requests quotes to repair/replace multiple sections of the concrete hangar floor in Hangar 661. See attachment 1 for approximate locations. The depth of the concrete in these sections must be replaced full-depth. All replacement concrete needs to be doweled/pinned into the existing concrete and re-barred. See attachment 2 for installation requirements. The strength of the concrete must be at minimum 5000psi.

Listed below are the section sizes to be replaced.

- 34ft by 4ft
- 83ft by 4ft
- 34ft by 4ft
- 17ft by 2ft
- 44ft by 3ft

The point of contact for this RFP is:

Megan Murray, Assistant Airport Manager
Sawyer International Airport
Airport Services Center
125 G Avenue
Gwinn, Michigan 49841
Telephone: 906.346.3308 Extension: 3131
Facsimile: 906.346.3309
mmurray@mqtco.org

Project Requirements

1. All work shall be accomplished in accordance with all applicable Federal, State and local laws and regulations.
2. Work shall be completed by workers accredited by the State of Michigan.
3. The contractor is responsible for securing all permits (if any) required for the project.
4. Workmanship and materials to be warranted for one year from project completion.
5. The contractor shall comply with all Marquette County Insurance Requirements per Exhibit 1.
6. The contractor must comply with the current prevailing wages requirements per the Davis Bacon Wage Act. Current rates are attached as Exhibit 2.
7. This project will be funded by the Federal Aviation Administration (FAA) Airport Improvement Program (AIP)/CARES Act Grant to the Airport. Successful bidders must comply with all FAA/CARES Act requirements, including but not limited to:

    - Civil Rights-Title VI Assurance (49 USC § 47123, FAA Order 1400.11). The County of Marquette, in accordance with the provisions of Title VI of the Civil Rights Act of 1964 (78 Stat. 252, 42 USC §§ 2000d to 2000d-4) and the Regulations, hereby notifies all bidders or offerors that it will affirmatively ensure

that any contract entered into pursuant to this advertisement, disadvantaged business enterprises will be afforded full and fair opportunity to submit bids in response to this invitation and will not be discriminated against on the grounds of race, color, or national origin in consideration for an award.

- Buy American Preference
  (Title 49 USC § 50101)

- Debarment and Suspension
  (2 CFR part 180 (Subpart C). 2 CFR part 1200, DOT Order 4200.5)

- Disadvantaged Business Enterprise
  (49 CFR part 26)

- Trade Restriction Certification
  (49 USC § 50104, 49 CFR part 30)

- Procurement of Recovered Materials
  (2 CFR § 200.322, 40 CFR part 247, Solid Waste Disposal Act)

  Link to website for any questions/further information:
  https://www.faa.gov/airports/aip/procurement/federal_contract_provisions/media/combined-federal-contract-provisions.pdf

Form of Response

Proposal response form with lump sum not to exceed price for above described Concrete Repair/Replacement for Hangar 661 in this RFP.

Price must be firm for sixty (60) days.

Payment to Contractor

Payment will be made within 30 days after satisfactory project completion.

The County will award the bid to the lowest responsive bidder. A responsive bidder is one that does not vary from specifications and terms required. The County reserves the right to wave irregularities in the bid proposals.

PROPOSAL FORM
Sawyer International Airport
Hangar 661 Concrete Floor
Repair/Replacement

Name:

_____

Address:

_____

_____

Email:

_____

Telephone:

_____

Fax:

_____

AUTHORIZED SIGNATURE AND TITLE

LUMP SUM AMOUNT FOR BID $_____

_____dollars

Written Amount

Signature:

Contractor must acknowledge by signature, receipt of addenda if issued.

Addendum No. 1_____

Addendum No. 2_____

ATTACHMENTS TO THIS BID:

The following documents are attached to and made part of this Bid:
1. Buy American Certification
2. Certification of Bidder Regarding Tax Delinquency and Felony Convictions
3. Trade Restriction Certification
4. Marquette County Insurance Requirements

BUY AMERICAN CERTIFICATION

The contractor agrees to comply with 49 USC § 50101, which provides that Federal funds may not be obligated unless all steel and manufactured goods used in AIP-funded projects are produced in the United States, unless the FAA has issued a waiver for the product; the product is listed as an Excepted Article, Material Or Supply in Federal Acquisition Regulation subpart 25.108; or is included in the FAA Nationwide Buy American Waivers Issued list.

A bidder or offeror must submit the appropriate Buy America certification (below) with all bids or offers on AIP funded projects. Bids or offers that are not accompanied by a completed Buy America certification must be rejected as nonresponsive.

Certificate of Buy American Compliance for Manufactured Products

As a matter of bid responsiveness, the bidder or offeror must complete, sign, date, and submit this certification statement with their proposal. The bidder or offeror must indicate how they intend to comply with 49 USC § 50101 by selecting one on the following certification statements. These statements are mutually exclusive. Bidder must select one or the other (not both) by inserting a checkmark (□) or the letter "X".

☐ Bidder or offeror hereby certifies that it will comply with 49 USC § 50101 by:

a) Only installing steel and manufactured products produced in the United States, or;

b) Installing manufactured products for which the FAA has issued a waiver as indicated by inclusion on the current FAA Nationwide Buy American Waivers Issued listing, or;

c) Installing products listed as an Excepted Article, Material or Supply in Federal Acquisition Regulation Subpart 25.108.

By selecting this certification statement, the bidder or offeror agrees:

1. To provide to the Owner evidence that documents the source and origin of the steel and manufactured product.
2. To faithfully comply with providing US domestic product.
3. To furnish US domestic product for any waiver request that the FAA rejects.
4. To refrain from seeking a waiver request after establishment of the contract, unless extenuating circumstances emerge that the FAA determines justified.

☐ The bidder or offeror hereby certifies it cannot comply with the 100% Buy American Preferences of 49 USC § 50101(a) but may qualify for either a Type 3 or Type 4 waiver under 49 USC § 50101(b). By selecting this certification statement, the apparent bidder with the apparent low bid agrees:

1. To the submit to the Owner within 15 calendar days of the bid opening, a formal waiver request and required documentation that support the type of waiver being requested.

2. That failure to submit the required documentation within the specified timeframe is cause for a non-responsive determination may result in rejection of the proposal.

3. To faithfully comply with providing US domestic products at or above the approved US domestic content percentage as approved by the FAA.

4. To refrain from seeking a waiver request after establishment of the contract, unless extenuating circumstances emerge that the FAA determines justified.

Required Documentation

Type 3 Waiver - The cost of the item components and subcomponents produced in the United States is more that 60% of the cost of all components and subcomponents of the "item". The required documentation for a type 3 waiver is:

a) Listing of all product components and subcomponents that are not comprised of 100% US domestic content (Excludes products listed on the FAA Nationwide Buy American Waivers Issued listing and products excluded by Federal Acquisition Regulation Subpart 25.108; products of unknown origin must be considered as non-domestic products in their entirety)

b) Cost of non-domestic components and subcomponents, excluding labor costs associated with final assembly at place of manufacture.

c) Percentage of non-domestic component and subcomponent cost as compared to total "item" component and subcomponent costs, excluding labor costs associated with final assembly at place of manufacture.

Type 4 Waiver – Total cost of project using US domestic source product exceeds the total project cost using non-domestic product by 25%. The required documentation for a type 4 of waiver is:

a) Detailed cost information for total project using US domestic product

b) Detailed cost information for total project using non-domestic product

False Statements: Per 49 USC § 47126, this certification concerns a matter within the jurisdiction of the Federal Aviation Administration and the making of a false, fictitious or fraudulent certification may render the maker subject to prosecution under Title 18, United States Code.

_____ _____

Date Signature

_____ _____

Company Name Title

CERTIFICATION OF BIDDER REGARDING TAX DELINQUENCY AND FELONY CONVICTIONS

The BIDDER must complete the following two certification statements. The BIDDER must indicate its current status as it relates to tax delinquency and felony conviction by inserting a checkmark (☒ or the letter "X" in the space following the applicable response. The BIDDER agrees that, if awarded a contract resulting from this solicitation, it will incorporate this provision for certification in all lower tier subcontracts.

1) The BIDDER represents that it is not a corporation that has any unpaid Federal tax liability that has been assessed, for which all judicial and administrative remedies have been exhausted or have lapsed, and that is not being paid in a timely manner pursuant to an agreement with the authority responsible for collecting tax liability. _____
2) The BIDDER represents that it is not a corporation that was convicted of a criminal violation under any Federal law within the preceding 24 months. _____

Note: If a BIDDER responds in the affirmative to either of the above representations, the BIDDER is ineligible to receive an award unless the SPONSOR has received notification from the agency suspension and debarment official (SDO) that the SDO has considered suspension or debarment and determined that further action is not required to protect the Government's interests. The BIDDER therefore must provide information to the SPONSOR about its tax liability or conviction to the SPONSOR, who will then notify the FAA Airports District Office, which will then notify the agency's SDO to facilitate completion of the required considerations before award decisions are made.

Term Definitions

Felony conviction: Felony conviction means a conviction within the preceding twenty-four (24) months of a felony criminal violation under any Federal law and includes conviction of an offense defined in a section of the U.S. code that specifically classifies the offense as a felony and conviction of an offense that is classified as a felony under 18 U.S.C. § 3559.

Tax Delinquency: A tax delinquency is any unpaid Federal tax liability that has been assessed, for which all judicial and administrative remedies have been exhausted, or have lapsed, and that is not being paid in a timely manner pursuant to an agreement with the authority responsible for collecting the tax liability.

_____	_____
Date	Signature
_____	_____
Company Name	Title

TRADE RESTRICTION CERTIFICATION

The BIDDER must complete the following certification statements. The BIDDER agrees that, if awarded a contract resulting from this solicitation, it will incorporate this provision for certification in all lower tier subcontracts. By submission of an offer, the Offeror certifies that with respect to this solicitation and any resultant contract, the Offeror –

1) is not owned or controlled by one or more citizens of a foreign country included in the list of countries that discriminate against U.S. firms as published by the Office of the United States Trade Representative (USTR);

2) has not knowingly entered into any contract or subcontract for this project with a person that is a citizen or national of a foreign country included on the list of countries that discriminate against U.S. firms as published by the USTR; and

3) has not entered into any subcontract for any product to be used on the Federal project that is produced in a foreign country included on the list of countries that discriminate against U.S. firms published by the USTR.

This certification concerns a matter within the jurisdiction of an agency of the United States of America and the making of a false, fictitious, or fraudulent certification may render the maker subject to prosecution under Title 18 USC Section 1001.

The Offeror/Contractor must provide immediate written notice to the Owner if the Offeror/Contractor learns that its certification or that of a subcontractor was erroneous when submitted or has become erroneous by reason of changed circumstances. The Contractor must require subcontractors provide immediate written notice to the Contractor if at any time it learns that its certification was erroneous by reason of changed circumstances.

Unless the restrictions of this clause are waived by the Secretary of Transportation in accordance with 49 CFR 30.17, **no contract shall be awarded to an Offeror or subcontractor:**

1) who is owned or controlled by one or more citizens or nationals of a foreign country included on the list of countries that discriminate against U.S. firms published by the USTR or

2) whose subcontractors are owned or controlled by one or more citizens or nationals of a foreign country on such USTR list or

3) who incorporates in the public works project any product of a foreign country on such USTR list.

Nothing contained in the foregoing shall be construed to require establishment of a system of records in order to render, in good faith, the certification required by this provision. The knowledge and information of a contractor is not required to exceed that which is normally possessed by a prudent person in the ordinary course of business dealings.

The Offeror agrees that, if awarded a contract resulting from this solicitation, it will incorporate this provision for certification without modification in all lower tier subcontracts. The Contractor may rely on the certification of a prospective subcontractor that it is not a firm from a foreign country included on the list of countries that discriminate against U.S. firms as published by USTR, unless the Offeror has knowledge that the certification is erroneous.

This certification is a material representation of fact upon which reliance was placed when making an award. If it is later determined that the Contractor or subcontractor knowingly rendered an erroneous certification, the Federal Aviation Administration (FAA) may direct through the Owner cancellation of the contract or subcontract for default at no cost to the Owner or the FAA.

_____	_____
Date	Signature
_____	_____
Company Name	Title

NOTICE TO BIDDERS
BID PROTEST / DISPUTE PROCEDURES

The following criteria shall be met in order to protest the bid and/or award for this project:

- The protest shall include the name, street address, electronic mail address, and telephone number of the protester. All protested/disputed item(s) shall be detailed in writing and include justification or grounds for protest.
- Pre-Bid Protest: If a protester formally disputes the procurement because the bid solicitation is allegedly defective, the protest shall be submitted in writing to the Sponsor no later than 7 calendar days prior to the bid due date and time. Late submittal of a protest regarding improper bid solicitations may result in rejection of the protest without action by the Sponsor, per FAA policy.
  Pre-Award Protest: If a protester formally disputes award of the project because of allege improper bid evaluation, the protest shall be submitted in writing to both the Sponsor and Consultant no later than 14 calendar days following the issuance of the Recommendation to Award.
- Post-Award Protest: No protest received after an award has been made will be considered.
- Protests shall be submitted in writing to the following location:

Sponsor:

Ms. Megan Murray, Assistant Airport Manager
Sawyer International Airport
125 G Avenue
Gwinn, MI 49841
mmurray@mqtco.org

All protests must be conspicuously marked and identified that the correspondence contains a bid protest. Protests delivered by e-mail shall not be considered received or official unless the Sponsor responds to the e-mail acknowledging receipt of the protest. Hard copies meeting the deadlines and all requirements should therefore also be submitted. Without this acknowledgement the protester must conclude that the protest has not been received.

The Sponsor will notify the FAA upon receipt of a protest. The Sponsor will respond in detail to each substantive issue raised by a protest submitted in strict accordance with these written requirements. Items addressed by addenda subsequent to a bid protest that address the protested item(s) will not be allowed to be considered for dispute. A protest or specific protest allegations may be dismissed any time sufficient information is obtained by the Sponsor warranting dismissal. The Sponsor's determination is final. FAA will only entertain protests that involve (1) a violation of Federal laws or regulations and/or (2) allegations that the Sponsor's written protest procedures were not followed. Any information contained within a protest will become public record subject to disclosure under the Freedom of Information Act. The information will not be treated as confidential. Protests must be received by the established deadlines with no exceptions.

Deadline for receipt of bid protests: 11:00 am (EDT) March 22nd, 2023. Deadline for receipt of award protests: 5:00 pm (EDT) April 12th, 2023.

ADDENDUM TO CONTRACT

INDEMNIFICATION

To the fullest permitted by law, the Contractor shall indemnify, defend, and hold harmless the County of Marquette, its officers, agents, employees, elected and appointed officials, and volunteers from and against any and all claims, losses or liability, including attorney's fees, arising from injury or death to persons or damage to property occasioned by any act, omission or failure of the Contractor, its subcontractors, and any of its officers, agents, employees, and volunteers in performing the work required by this contract. The Contractor's obligation under this provision shall not be limited in any way by any terms of this contract, or the insurance limits. In order to assure a source of funding to meet this indemnification obligation, the Contractor shall, at its sole cost and expense, obtain and maintain the following described insurance coverages:

LIABILITY INSURANCE

The Contractor shall procure and maintain for the duration of the contract, insurance against claims for injuries to persons or damages to property which may arise from or in connection with the performance of the work hereunder by the Contractor, its agents, representatives, employees, volunteers, or subcontractors.

INSURANCE REQUIREMENTS

The insurance coverage required shall be at least as broad as:

1. Commercial General Liability ("occurrence" form).

LIMITS OF INSURANCE

The Contractor shall maintain limits on said policy of no less than:

1. Commercial General Liability: $1,000,000 combined single limit per occurrence for bodily injury, personal injury, and property damage.

DEDUCTIBLES

Any deductibles or self-insured retentions must be declared to and approved by the County.

OTHER INSURANCE PROVISIONS

The policies are to contain, or be endorsed to contain, the following provisions:

1. Commercial General Liability and Automobile Liability Coverages:

    a. The County, its officers, agents, employees, elected and appointed officials, and volunteers shall be covered as additional insureds as respects: liability arising out of activities performed by or on behalf of the Contractor; products and completed operations of the Contractor; premises owned, occupied or used by the Contractor, or automobiles owned, leased, hired or borrowed by the Contractor. The coverage shall contain no special limitations on the scope of protection afforded to the County, its officers, agents, employees, elected and appointed officials, and volunteers.

    b. The Contractor's insurance coverage shall be primary insurance as respects the County, its officers, agents, employees, elected and appointed officials, and volunteers. Any insurance or self-insurance maintained by the County, its officers, agents, employees, elected and appointed

officials, and volunteers shall be excess of the Contractor's insurance and shall not contribute to it.

c. Any failure to comply with reporting provisions of the policies shall not affect coverage provided to the County, its officers, agents, employees, elected and appointed officials, and volunteers.

d. The Contractor's insurance shall apply separately to each insured against whom claim is made or suit is brought, except with respect to the limits of the insurer's liability.

2. All Coverages:

a. Contractor hereby releases County from any claim for recovery for any loss or damage which is insured under valid and collectible insurance policies to the extent of any recovery collectible under such insurance. It is further agreed that this waiver shall apply only when permitted by the applicable policy of insurance.

b. Each insurance policy required by this clause shall be endorsed to state that coverage shall not be suspended, voided, cancelled by either party, reduced in coverage or in limits except after thirty (30) days prior written notice by certified mail, return receipt requested, has been given to the County.

ACCEPTABILITY OF INSURERS

Unless otherwise approved by the County, insurers must be identified as authorized and eligible by the Michigan Insurance Bureau. In addition, insurance is to be placed with insurers with a Best's rating of A or better.

CERTIFICATES/ENDORSEMENTS OF INSURANCE

Contractor shall furnish the County with certificates of insurance and with any and all original endorsements affecting coverage required by this contract. The certificates and endorsements for each insurance policy are to be signed by a person authorized by that insurer to bind coverage on its behalf. All certificates and endorsements are to be received and approved by the County before work commences. The County reserves the right to require complete, certified copies of all required insurance policies, at any time.

Contractor shall include all subcontractors as insureds under its policies or shall furnish separate certificates and endorsements for each subcontractor. All coverages for subcontractors shall be subject to all of the requirements stated herein.

The said certificates and endorsements shall be forwarded with the contract number to the individual identified below:

CONTRACT NUMBER_____

Molly Strohm, Risk Manager
234 West Baraga Avenue
Marquette, MI 49855
(906) 225-8165 or Fax (906) 225-8155

ACCEPTANCE OF CERTIFICATE

Acceptance of any certificate(s) and/or endorsement(s) of insurance by the County does not waive the insurance requirements provided in the foregoing paragraphs. Should the County sustain any loss or be required to pay any claim as a result of the Contractor's failure to obtain or maintain insurance as is required by this contract, the Contractor shall indemnify the County for any such loss. This indemnification shall occur regardless of whether or not the County has accepted any certificate(s) and/or endorsement(s) of insurance provided by the Contractor or its carrier.

ADDITIONAL INSURED ENDORSEMENT

It is understood and agreed that the County of Marquette shall be Additional Insureds, which shall include all elected and appointed officials, all employees, agents, and volunteers, all boards, commissions and/or authorities and their board members, employees, and volunteers.

This coverage shall be primary to the Additional Insureds, and not contributing with any other insurance or similar protection available to the Additional Insureds, whether said other available coverage be primary, contributing or excess.

Exhibit #1

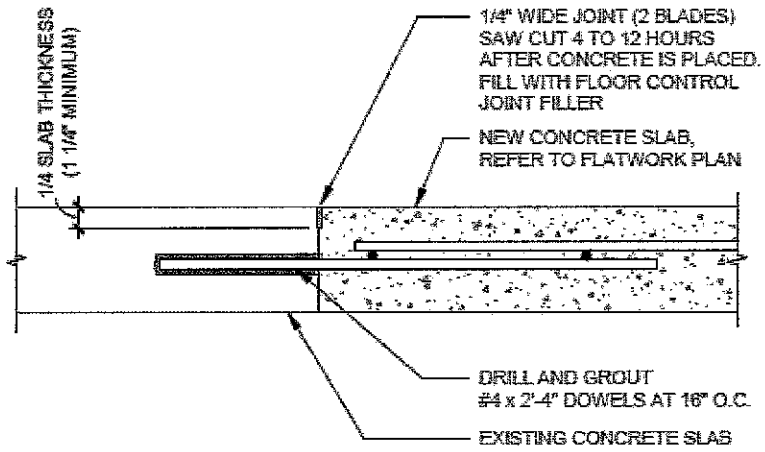

6 NEW SLAB AT EXISTING

1 1/2" = 1'-0"

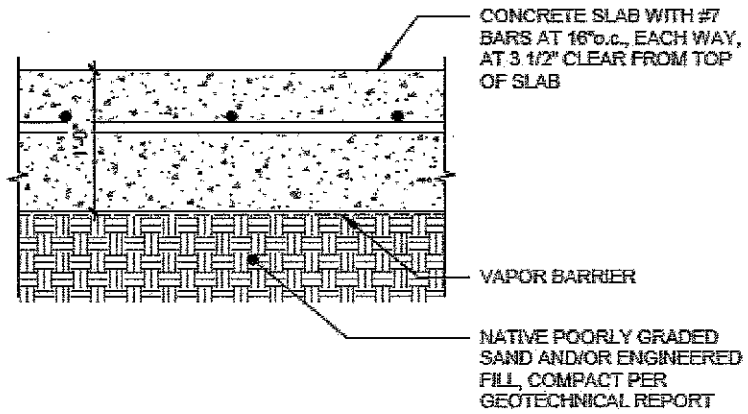

SLB12

1 STRUCTURAL SLAB TYPES

1" = 1'-0"

Exhibit #2