MICHIGAN TECHNOLOGICAL UNIVERSITY

PLAN OF PROPOSED

LAKESHORE CENTER
SEAWALL REPAIRS - PHASE II

IN

CITY OF HOUGHTON
MICHIGAN

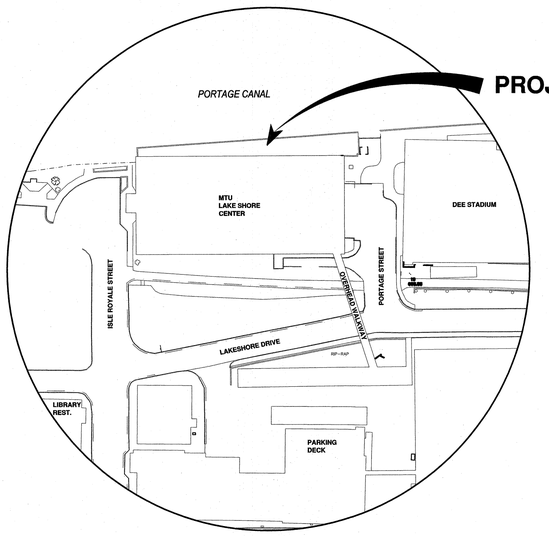

VICINITY MAP
SCALE: NONE

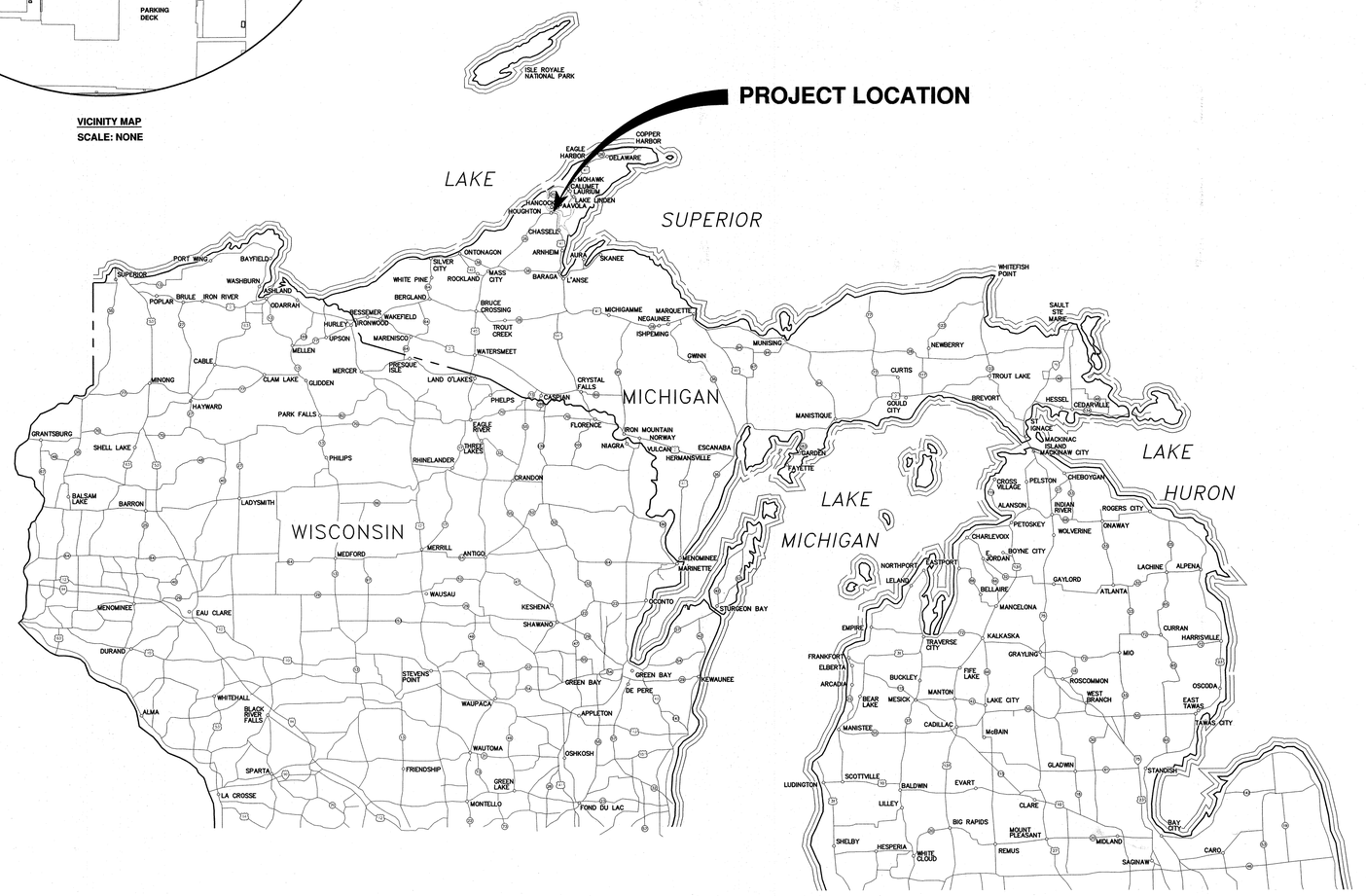

UTILITY COORDINATION:

THE FOLLOWING UTILITIES ARE LOCATED IN OR NEAR THE RIGHT OF WAY OF THE PROPOSED PROJECT.

GAS:
SEMCO ENERGIES
34 EAST U. S. 41
NEGAUNEE, MICHIGAN 49866
(906) 231-7972
CONTACT: NATE GAGNON

WATER, SANITARY AND STORM SEWERS
CITY OF HOUGHTON
616 SHELDEN AVENUE
HOUGHTON, MICHIGAN 49931
(906) 482-1700
CONTACT: RYAN AVENDT, DPW DIRECTOR

CATV:
CHARTER COMMUNICATIONS
115 EAST MCLEOD AVE
IRONWOOD, MICHIGAN 49938
(906) 235-9623
CONTACT: JEFFERY GREGG

TELEPHONE:
AT&T
211 EAST B STREET
IRON MOUNTAIN, MICHIGAN 49801
(906) 779-2744
CONTACT: MARSHA BERTOLDI

BARAGA TELEPHONE
204 STATE STREET
BARAGA, MICHIGAN 49908
(906) 353-6644
CONTACT: JON FRENCH

ELECTRICITY:
UPPER PENINSULA POWER COMPANY
WEST HOUGHTON SERVICE CENTER
18494 HOUGHTON CANAL ROAD
HOUGHTON, MICHIGAN 49931
(906) 483-4572
CONTACT: MIKE JURMU

CONTRACTOR SHALL COORDINATE ALL OF THEIR WORK AND THE UTILITY COMPANIES' RELOCATION WORK AT NO ADDITIONAL COST TO THE PROJECT.

FOR PROTECTION OF UNDERGROUND UTILITIES AND IN CONFORMANCE WITH PUBLIC ACT 174 OF 2013, THE CONTRACTOR SHALL DIAL 811 A MINIMUM OF THREE FULL WORKING DAYS, EXCLUDING SATURDAYS, SUNDAYS AND HOLIDAYS PRIOR TO BEGINNING EACH EXCAVATION IN AREAS WHERE PUBLIC UTILITIES HAVE NOT BEEN PREVIOUSLY LOCATED. MEMBERS WILL THUS BE ROUTINELY NOTIFIED. THIS DOES NOT RELIEVE THE CONTRACTOR OF THE RESPONSIBILITY OF NOTIFYING UTILITY OWNERS WHO MAY NOT BE A PART OF THE "MISS DIG" ALERT SYSTEM.

INDEX OF SHEETS

PHASE	SHEET	DESCRIPTION
II	G001	TITLE SHEET
II	G002	GENERAL NOTES
II	C101	EXISTING SITE/DEMO PLAN
II	C102	PROPOSED SITE PLAN
II	C103	PROPOSED GRADING PLAN
I	C104	EXISTING SITE PRE COLLAPSE (INFORMATION ONLY)
I	C105	EXISTING SITE POST COLLAPSE
II	S101	SHEET PILE PLAN
II	S301	PIER SECTIONS
II	S302	PIER SECTIONS
II	S303	SHEET PILE AT NW CORNER
II	S501	STRUCTURAL DETAILS
III	S901	FUTURE ADDITIONAL SHEETING PLAN
III	S902	FUTURE ADDITIONAL SHEETING (ENLARGED PLAN)
III	S903	FUTURE PIER SECTIONS

INFORMATION ONLY (NIC)

PREPARED UNDER SUPERVISION OF

GEORGE A. KISKILA, JR., P.E.
LICENSED PROFESSIONAL ENGINEER

U.P. ENGINEERS AND ARCHITECTS, INC.
ORGANIZATION

100 PORTAGE ST., HOUGHTON, MI 49931
ADDRESS

STATE OF MICHIGAN
GEORGE A. KISKILA, JR.
ENGINEER
No. 33619
LICENSED PROFESSIONAL ENGINEER

Know what's below. Call before you dig.

U.P. ENGINEERS & ARCHITECTS, INC.
ENGINEERING ARCHITECTURE PLANNING SURVEYING ENVIRONMENTAL

UPEA ENGINEERS & ARCHITECTS
www.upea.com

ISSUED FOR:

DATE:	
09/27/21	RECOMMENDATION LETTER
06/16/22	PERMIT APPLICATION
08/18/22	REVISED PERMIT APPLICATION
10/26/22	REVISED PERMIT APPLICATION
11/04/22	BIDDING & CONSTRUCTION

MTU - LAKESHORE CENTER SEAWALL REPAIR/REPLACEMENT PLAN
MICHIGAN TECHNOLOGICAL UNIVERSITY
CITY OF HOUGHTON, MICHIGAN

PROJECT NO: M40-01265
DESIGNED BY: G.A.K./M.P.H.
DRAWN BY: M.E.P./P.A.K.
CHECKED: G.A.K.
APPROVED: G.A.K.

TITLE SHEET

PHASE II

G001

11/10/2022 1:45 PM
P:\M40-01265 MTU-MTU - LAKESHORE CENTER SEAWALL REPAIR\BIDS\DWG\M40-01265 G001.DWG

© U.P. Engineers & Architects, Inc.

PLAN SHEET LEGEND

EXISTING SYMBOLS

SB1	SOIL BORING		HAND BORING
S	SANITARY MANHOLE	D	STORM MANHOLE
CB or CB or	CATCH BASIN		HYDRANT
	WATER SHUTOFF	WV	WATER VALVE
	WATER WELL	GV	GAS VALVE
LP	PROPANE TANK	G	GAS MARKER
	UTILITY POLE		ROCK OUTCROPPING
	LIGHT POLE		GUY WIRE OR GUY POLE
	SINGLE POLE SIGN		FLAG POLE
T	TELEPHONE PEDESTAL		DOUBLE POLE SIGN
MB	MAIL BOX	E	ELECTRICAL PEDESTAL
	TREE (CONIFER)		BENCHMARK
	TREE (DECIDUOUS)		CONTROL POINT
	CLOTHESLINE POLE		PROPERTY CORNER

EXISTING LINES

OHT	OVERHEAD TELEPHONE LINE
OHE	OVERHEAD ELECTRIC LINE
GAS	GAS LINE
WTR	WATER LINE
UGT	UNDERGROUND TELEPHONE LINE
UGE	UNDERGROUND ELECTRIC LINE
SAN	SANITARY SEWER
STM	STORM SEWER
	PROPERTY BOUNDARY
	TREE LINE
	EDGE OF GRAVEL
	FENCE
	RETAINING WALL

PROPOSED LINES & SYMBOLS

	PROPOSED BITUMINOUS
	PROPOSED AGGREGATE SURFACE
	PROPOSED CONCRETE
	PROPOSED COLORED CONCRETE TRAIL
	PROPOSED RIPRAP
OR	PROPOSED TREE REMOVAL (INCIDENTAL TO PROJECT)
	PROPOSED SILT FENCE
	PROPOSED FENCE
	PROPOSED CLEARING LIMITS (INCIDENTAL TO PROJECT)
SAN	PROPOSED SANITARY SEWER
STM	PROPOSED STORM SEWER
WTR	PROPOSED WATER MAIN
WV	PROPOSED WATER VALVE
	PROPOSED FIRE HYDRANT
	PROPOSED CURB STOP
	PROPOSED POWER PEDESTAL
	PROPOSED FIRE EXTINGUISHER CABINET

GENERAL NOTES:

1. ALL MATERIALS AND WORKMANSHIP REFERENCED TO MDOT SPECIFICATIONS SHALL BE IN ACCORDANCE WITH THE MICHIGAN DEPARTMENT OF TRANSPORTATION – 2012 STANDARD SPECIFICATIONS FOR CONSTRUCTION.

2. WHERE THE FOLLOWING ITEMS ARE CALLED FOR ON THE PLANS OR IN THE SPECIFICATIONS, THEY ARE TO BE CONSTRUCTED IN ACCORDANCE WITH THE MDOT STANDARD PLAN GIVEN BELOW, UNLESS OTHERWISE INDICATED.

SOIL EROSION AND SEDIMENTATION CONTROL MEASURES	R–96–E
TEMPORARY TRAFFIC CONTROL DEVICES	WZD–125–E
CONCRETE CURB AND CONCRETE CURB & GUTTER	R–30–G

3. TRAFFIC ON ALL STREETS SHALL BE MAINTAINED IN ACCORDANCE WITH THE MICHIGAN MANUAL OF UNIFORM TRAFFIC CONTROL DEVICES (MMUTCD). THE CONTRACTOR SHALL SUBMIT A TRAFFIC CONTROL PLAN TO THE ENGINEER FOR APPROVAL, 10 DAYS PRIOR TO BEGINNING WORK. ALL SIGNS, BARRICADES, WARNING LIGHTS AND OTHER DEVICES SHALL BE IN ACCORDANCE WITH THE MMUTCD. SIGNING FOR STREET CLOSURES SHALL BE IN ACCORDANCE WITH THE MMUTCD. ANY STOP/TRAFFIC SIGNS REMOVED FOR CONSTRUCTION SHALL BE TEMPORARILY PLACED UNTIL RESTORATION IS COMPLETE. ALL TRAFFIC CONTROL MEASURES SHALL BE BY THE CONTRACTOR AND INCLUDED IN THE CONSTRUCTION COSTS OF THE PROJECT (NOT PAID FOR SEPARATELY).

4. THE LOCATION, SIZE AND ELEVATION OF EXISTING UTILITIES SHOWN ON THE PLANS WERE OBTAINED THROUGH FIELD OBSERVATIONS OR FROM EXISTING PLANS. THIS INFORMATION IS NOT GUARANTEED AND THE CONTRACTOR MUST DETERMINE FOR HIMSELF THE ACCURATE LOCATION OF ALL UTILITIES, PRIOR TO CONSTRUCTION, INCLUDING BUT NOT LIMITED TO WATER, SANITARY & STORM SEWER, GAS, ELECTRIC, TELEPHONE AND CABLE TV. CONTRACTOR IS RESPONSIBLE FOR LOCATING AND VERIFYING DEPTHS OF EXISTING UTILITIES ALONG EACH SECTION OF THE PROPOSED IMPROVEMENTS, PRIOR TO THE INSTALLATION OF EACH PIPE RUN OR IMPROVEMENT AREA. THE CONTRACTOR SHALL MAKE ALLOWANCES FOR WORKING AROUND AND/OR REPAIRING ALL SUCH UTILITIES.

5. CONTRACTOR SHALL COORDINATE WORK OF THIS CONTRACT WITH OTHER UTILITY COMPANIES' UTILITY LOCATIONS. ANY UTILITY RELOCATIONS REQUIRED FOR CONSTRUCTION OF THIS PROJECT SHALL BE INCIDENTAL TO THE COST OF THE PROJECT. CONTRACTOR SHALL COORDINATE WITH UTILITY COMPANY TO BRACE UTILITY POLES AS NECESSARY TO INSTALL THE PROPOSED UTILITIES. THE COST TO BRACE SUCH POLES SHALL BE INCIDENTAL TO THE COST OF THE PROJECT.

6. LOCATION AND INFORMATION REGARDING EXISTING WATER, SANITARY AND STORM SYSTEMS SHALL BE COORDINATED THROUGH THE CITY OF HOUGHTON DPW. CITY OF HOUGHTON DPW PERSONNEL WILL ASSIST THE CONTRACTOR IN LOCATING EXISTING WATER AND SEWER UTILITIES AS MUCH AS POSSIBLE.

7. FOR PROTECTION OF UNDERGROUND UTILITIES AND IN CONFORMANCE WITH PUBLIC ACT 174 OF 2013, THE CONTRACTOR SHALL DIAL 1–800–482–7171 OR 811 A MINIMUM OF THREE FULL WORKING DAYS, EXCLUDING SATURDAYS, SUNDAYS AND HOLIDAYS, PRIOR TO BEGINNING EACH EXCAVATION AREA. THIS DOES NOT RELIEVE THE CONTRACTOR OF THE RESPONSIBILITY OF NOTIFYING UTILITY OWNERS WHO MAY NOT BE A PART OF THE "MISS DIG" ALERT SYSTEM.

8. ALL SURVEYING MONUMENTS AND PROPERTY CORNERS DISTURBED DURING CONSTRUCTION SHALL BE REPLACED BY A REGISTERED LAND SURVEYOR, INCIDENTAL TO THE PRICE OF THE CONSTRUCTION.

9. THE CONDITIONS OF ALL PERMITS (EGLE, USACE, ACT 451 EROSION CONTROL, ETC.) SHALL BE STRICTLY ADHERED TO. THE CONTRACTOR SHALL FULLY INFORM HIMSELF OF ALL PERMIT REQUIREMENTS PRIOR TO BIDDING AND CONSTRUCTING THE WORK.

10. ANY INFORMATION PROVIDED ON THE PLANS REGARDING SUB–SURFACE SOIL CONDITIONS ARE PROVIDED FOR THE GENERAL INFORMATION OF THE BIDDING CONTRACTOR AND ARE NOT INTENDED TO MAKE REPRESENTATION OF THE TYPE OR ELEVATION OF ANY SUBSURFACE CONDITION. THE CONTRACTOR SHALL BE RESPONSIBLE TO VISIT THE SITE AND BASE THEIR BID ON THEIR OWN PERSONAL OBSERVATIONS AND/OR INVESTIGATIONS.

11. ALL AREAS DISTURBED BY THE PROPOSED CONSTRUCTION SHALL BE RESTORED TO ORIGINAL OR BETTER CONDITION BY THE CONTRACTOR AS INCLUDED IN THE OVERALL WORK. RESTORATION WILL ONLY BE PAID FOR WITHIN THE LIMITS AS SHOWN ON THESE PLANS AND PLAN DETAILS. AREAS DISTURBED BY THE CONTRACTOR OUTSIDE OF THE PAY LIMITS SHALL BE RESTORED AT NO ADDITIONAL COST TO THE OWNER. ANY RESTORATION REQUIRED AT ANY LOCATION OUTSIDE THE LIMITS OF THE WORK AS SHOWN ON THE PLANS, THROUGHOUT THE ENTIRE PROJECT, WILL BE AT THE EXPENSE OF THE CONTRACTOR.

12. THE LIMITS OF ANY ASPHALT OR CONCRETE RESTORATION/REPLACEMENT ARE SHOWN ON THE PLANS. ANY AREAS DISTURBED OUTSIDE OF THESE LIMITS SHOWN, WHICH REQUIRE REPLACEMENT DUE TO CONSTRUCTION OPERATIONS, SHALL BE AT THE EXPENSE OF THE CONTRACTOR. ALL ASPHALT AND BASE REPLACEMENT SHALL BE PERFORMED ACCORDING TO THE SPECIFICATIONS.

13. DRIVEWAYS, SIDEWALKS, CURB, CURB & GUTTER, ETC. SHALL BE REMOVED AND REPLACED WITHIN THE LIMITS OF THE CONSTRUCTION, WHERE INDICATED ON THE PLANS OR WHERE REQUIRED BY THE CITY OF HOUGHTON. ALL REPLACEMENT SHALL BE AS DETAILED AND DESCRIBED ON THESE PLANS AND IN THE SPECIFICATIONS.

14. CONTRACTOR TO COORDINATE OVERALL SEQUENCING OF WORK WITH THE CITY OF HOUGHTON DPW. SOME ITEMS OF WORK WILL REQUIRE TEMPORARY MEASURES OR OTHER SCHEDULING MEANS TO MAINTAIN UTILITY SERVICE AND PRESSURE TO ALL AREAS OF THE SYSTEMS DURING THE COURSE OF THE WORK.

15. CONTRACTOR SHALL PROPERLY REMOVE AND DISPOSE OF SOIL, ROCK, TIMBER, CONCRETE, VEGETATION, AND OTHER ITEMS, AS SPECIFIED AND REQUIRED, TO INSTALL THE PROPOSED WORK ITEMS. THESE REMOVAL ITEMS SHALL BE INCLUDED IN THE COST OF CONSTRUCTION. CONTRACTOR SHALL COORDINATE WITH THE CITY OF HOUGHTON OR MICHIGAN TECH UNIVERSITY FOR ANY DISPOSAL LOCATIONS AVAILABLE WITHIN THE CITY LIMITS. IF THERE ARE NO SUCH LOCATIONS AVAILABLE, THE CONTRACTOR SHALL HAVE TO DISPOSE OF ANY EXCAVATED MATERIALS IN A PERMITTED LOCATION OF THEIR OWN CHOOSING AND COST.

16. CONTRACTOR MUST OBTAIN A WRITTEN RELEASE FROM ANY PROPERTY OWNER REQUESTING THE PLACEMENT OF FILL MATERIAL. WRITTEN RELEASES MUST BE APPROVED BY THE CITY OF HOUGHTON AND ENGINEER.

17. THE CONTRACTOR SHALL OBTAIN, FROM THE CITY OF HOUGHTON, AND MTU DESIGNATED LOCATIONS FOR STORING AND STAGING MATERIALS AND EQUIPMENT. STORAGE AND STAGING OF MATERIALS WITHIN ROAD RIGHTS–OF–WAY OR PRIVATE PROPERTY IS PROHIBITED, UNLESS APPROVED BY THE OWNER AND/OR ENGINEER.

18. EXISTING FLOWLINES SHALL BE MAINTAINED ACROSS DRIVEWAYS AND AREAS WHERE WATER IS DIRECTED TO OTHER DRAINAGE FLOWLINES, CHANNELS OR STRUCTURES. FLOWLINES SHALL BE RE–ESTABLISHED BY SWALING PROPOSED PAVEMENT OR OTHER SURFACES, OR INSTALLING ASPHALT CURB, CONCRETE CURB OR CONCRETE CURB & GUTTER, WHERE EXISTING ITEMS WERE REMOVED OR WHERE INDICATED ON THE PLANS OR REQUIRED BY THE ENGINEER OR OWNER.

WATER & SEWER NOTES:

1. ALL EXISTING SEWERS SHALL BE KEPT IN OPERATION THROUGHOUT THE PROJECT. ALL EXISTING SEWERS WHICH BECOME BROKEN IN THE COURSE OF THE WORK SHALL BE REPAIRED WITH FERNCO STRONGBACK RC SERIES TYPE COUPLINGS AND PVC PIPE. REPAIRS TO EXISTING SEWERS SHALL BE MADE BY THE CONTRACTOR AT NO COST TO THE OWNER, AND SHALL BE CONSIDERED INCIDENTAL TO CONSTRUCTION. THE SIZE OF REPAIR MATERIALS SHALL MATCH THE DAMAGED SEWER.

2. WHEN REPAIRING, REPLACING OR CONNECTING TO EXISTING MANHOLES OR SEWER MAINS, THE CONTRACTOR SHALL COORDINATE ANY BYPASS PUMPING WITH THE CITY OF HOUGHTON PRIOR TO EXECUTING THE WORK. ALL FLOW SHALL BE PUMPED AROUND PERTINENT SEGMENTS DURING THE INSTALLATION AND TESTING OF THE NEW SYSTEM COMPONENTS.

3. CONTRACTOR SHALL COORDINATE ALL WATER MAIN SHUTOFFS AND SERVICE INTERRUPTIONS WITH THE CITY OF HOUGHTON DPW. ALL SHUTOFFS AND INTERRUPTIONS SHALL BE OF MINIMAL LENGTH, AND ALL AFFECTED CUSTOMERS SHALL BE DULY NOTIFIED BY THE CONTRACTOR AT LEAST 48 HOURS PRIOR TO SHUTOFF EVENTS.

4. THE EXACT RIM ELEVATIONS OF PROPOSED WATER VALVE BOXES AND MANHOLES WILL BE DETERMINED BY THE CONTRACTOR. RIMS SHALL BE DEPRESSED ½ INCH BELOW FINISHED PAVEMENT GRADE TO ALLOW FOR WINTER PLOWING CONDITIONS. ALL MANHOLES IN PAVEMENT AREAS SHALL BE EQUIPPED WITH SELF ADJUSTING CASTINGS AND EJ INFRA–RISER–TYPE ADJUSTING RINGS, AS DESCRIBED IN THE SPECIFICATIONS. CONTRACTOR SHALL INSURE THAT SELF LEVEL MANHOLE UNITS ARE PROPERLY INSTALLED DURING PAVING OPERATIONS.

5. EXISTING WATER AND SEWER MAIN LOCATIONS SHOWN ON THESE PLANS ARE BASED ON THE BEST AVAILABLE INFORMATION. IN SOME CASES, MAINS MAY DIFFER FROM THOSE SHOWN. CONTRACTOR IS REQUIRED TO CONTACT MISS DIG FOR UTILITY LOCATIONS AND EXCAVATE WITH CAUTION. CITY OF HOUGHTON DPW PERSONNEL WILL PROVIDE WATER AND SEWER MAIN LOCATIONS TO THE BEST OF THEIR ABILITY AND KNOWLEDGE.

6. ALL PROPOSED SANITARY INLET PIPING SHALL DISCHARGE INTO DEDICATED FLOW CHANNELS. NO SERVICE CONNECTIONS OR DROP MANHOLE PIPING SHALL DISCHARGE ONTO THE MANHOLE BENCH.

EROSION CONTROL NOTES:

1. THE CONTRACTOR IS REQUIRED TO PROVIDE ALL SOIL EROSION/SEDIMENTATION CONTROL MEASURES DURING AND AFTER CONSTRUCTION. METHODS SHALL COMPLY WITH MICHIGAN ACT 451 (PART 91), EROSION AND SEDIMENTATION CONTROL ITEMS CAN BE FOUND ON MDOT STANDARDS PLAN R–96–E SOIL EROSION AND SEDIMENTATION CONTROL MEASURES. ACTUAL DEPLOYMENT METHODS WILL VARY DEPENDING ON SPECIFIC SITE CONDITIONS. ALL TEMPORARY EROSION CONTROL MEASURES SHALL BE REMOVED AT THE COMPLETION OF CONSTRUCTION, UNLESS DIRECTED BY THE ENGINEER TO BE LEFT IN PLACE. CARE SHALL BE TAKEN DURING REMOVAL TO MINIMIZE SILTATION IN NEARBY DRAINAGE COURSES AND STORM STRUCTURES. CONTRACTOR WILL BE REQUIRED TO PROVIDE AN EROSION PLAN AND CONSTRUCTION SCHEDULE AS PART OF THE SESC PERMIT APPLICATION.

LIST OF ABBREVIATIONS

AGG	– AGGREGATE	PT	– POINT
APPROX	– APPROXIMATE	P.O.B.	– POINT OF BEGINNING
BIT	– BITUMINOUS ASPHALT	P.O.E.	– POINT OF ENDING
C/L	– CENTERLINE	PROP	– PROPOSED
C.O.	– CLEAN OUT	RR	– RAILROAD
CONC	– CONCRETE	REF	– REFERENCE
CP	– CONTROL POINT	R&R	– REMOVE & REPLACE
C.I.P.P.	– CURED IN PLACE PIPE	RCP	– REINFORCED CONCRETE PIPE
D.B.	– DIRECTIONAL BORE	R.O.W. or R/W	– RIGHT–OF–WAY
DIA	– DIAMETER	SAN	– SANITARY
E	– EAST	SVC	– SERVICE
ELEV or EL	– ELEVATION	SWK	– SIDEWALK
EX or EXIST	– EXISTING	SB	– SOIL BORING
GAS SVC	– GAS SERVICE	S	– SOUTH
HORIZ	– HORIZONTAL	STA	– STATION
HMA	– HOT MIX ASPHALT	STM or ST	– STORM
HYD	– HYDRANT	TYP	– TYPICAL
INV	– INVERT	UGT	– UNDERGROUND TELEPHONE
LF	– LINEAL FEET	VERT	– VERTICAL
LOC	– LOCATION	WM	– WATER MAIN
MH	– MANHOLE	W SVC	– WATER SERVICE
MIN	– MINIMUM	W	– WEST
N	– NORTH	W/	– WITH

ALL NOTES ON THIS SHEET ARE TO BE INCORPORATED, BY REFERENCE TO ALL PLAN SHEETS OF THIS SET GIVEN APPLICABILITY TO THE PROPOSED WORK.

UPEA ENGINEERS & ARCHITECTS
www.upea.com

MTU - LAKESHORE CENTER SEAWALL REPAIR/REPLACEMENT PLAN
MICHIGAN TECHNOLOGICAL UNIVERSITY
CITY OF HOUGHTON, MICHIGAN

ISSUED FOR:	DATE:
RECOMENDATION LETTER	09/27/21
PERMIT APPLICATION	06/16/22
REVISED PERMIT APPLICATION	08/18/22
BIDDING & CONSTRUCTION	11/04/22

MTU - LAKESHORE CENTER SEAWALL REPAIR/REPLACEMENT PLAN
MICHIGAN TECHNOLOGICAL UNIVERSITY

PROJECT NO: M40-01265

DESIGNED BY: G.A.K./M.P.H.
DRAWN BY: M.E.P./P.A.K.
CHECKED: G.A.K.
APPROVED: G.A.K.

GENERAL NOTES

PHASE II

G002

P:\M40-01265-MTU-MTU - LAKESHORE CENTER SEAWALL REPAIRS\DWGS\M40-01265 G002.DWG
11/10/2022 1:43 PM

© U.P. Engineers & Architects, Inc.

CONTROL POINT DATA

I.D.	DESCRIPTION	NORTHING	EASTING
CP8167	8167 – PK NAIL W/TAG IN BIT	856995.83	25856651.08
CP8168	8168 – PK NAIL W/TAG IN BIT	856839.03	25856688.87
CP11108	11108 – X ON CONCRETE	857065.92	25856689.97
CP11109	11109 – SPIKE IN GRASS	857062.21	25856950.05
CP11110	11110 – PK NAIL W/TAG IN BIT	856897.08	25856968.37
CP15000		857079.47	25856980.56

BENCHMARK DATA

I.D.	DESCRIPTION	ELEVATION	LOCATION
BM 12131	BM–TOP–HYD	610.05	TOP OF TOP NUT ON HYDRANT

GRAPHIC SCALE
0 10 20 40
(IN FEET)
1 inch = 20 ft.

QUANTITIES THIS SHEET (INFORMATION ONLY)

ITEM	AVERAGE LENGTH	AVERAGE WIDTH	AVERAGE DEPTH	VOLUME
EXISTING RIPRAP	175'	60'	4.5'	1750 CYD

COLEMAN ENGINEERING COMPANY
635 CIRCLE DRIVE
IRON MOUNTAIN, MICHIGAN 49801
Telephone: (906)-774-3440 Fax: (906)-774-7776

Boring Log B-1 (1 OF 2)

JOB NO.: 210497.GPJ
PROJECT: M.T.U. Dock Repair — BORING NO.: B-1
CLIENT: U.P. Engineers & Architects — 1 OF 2
BORING LOCATION: 47.123142567825° N., -88.565927398588° W. - See soil boring location drawing — ELEV.:
RIG TYPE: Diedrich D-50 ATV — DRILL CREW: R. Ochs / B. Wilcox
DRILLING METHOD: 2-7/8" Roller Bit — BORING DEPTH: 37.0
DATE STARTED: 6/22/21 — DATE COMPLETED: 6/22/21 — REVIEWED BY: E. Shepeck — DATE: 6/29/21
HOLE CLOSURE: Bentonite Grout

NUMBER	SPT VALUES BLOWS/6"(N)	RECOVERY	DEPTH (FT)	SOIL DESCRIPTION	COMMENTS
			0	WATER	
			20	20.0'	

Boring Log B-1 (2 OF 2)

JOB NO.: 210497.GPJ
PROJECT: M.T.U. Dock Repair — BORING NO.: B-1
CLIENT: U.P. Engineers & Architects — 2 OF 2
BORING LOCATION: 47.123142567825° N., -88.565927398588° W. - See soil boring location drawing — ELEV.:
RIG TYPE: Diedrich D-50 ATV — DRILL CREW: R. Ochs / B. Wilcox
DRILLING METHOD: 2-7/8" Roller Bit — BORING DEPTH: 37.0
DATE STARTED: 6/22/21 — DATE COMPLETED: 6/22/21 — REVIEWED BY: E. Shepeck — DATE: 6/29/21
HOLE CLOSURE: Bentonite Grout

NUMBER	SPT VALUES BLOWS/6"(N)	RECOVERY	DEPTH (FT)	SOIL DESCRIPTION	COMMENTS
1	2-2-4 (6)	0.3	20	(FILL) SILTY SAND, black, fine to coarse, organic odor, wet	3" casing advancer 20.0' to 30.0' 2" SPT Sampling 140# wt., 30" drop Auto Hammer
2	8-15-17 (32)	0.5	22	± 22.0' (GP) POORLY SORTED GRAVEL WITH SAND, gray, fine to coarse, angular to sub-rounded, wet, dense	
3	29-39-33 (72)	0.7	25	(Glacial Till) ± 24.5' (SP-SC) POORLY GRADED SAND WITH CLAY, brown, fine, trace coarse sand, wet, very dense	
4	50/0.4' (-)	0.1	27	(Glacial Till) ± 27.0' (SC) CLAYEY SAND WITH FINE GRAVEL, brown, fine, lightly plastic, some coarse sand, wet, very dense	
5	50/0.3' (-)	0.1	30		2-7/8" Roller Bit 30.0' to 37.0'
			34	(Glacial Till) 34.0' WEATHERED BEDROCK	
6	50/0' (-)	0.1	35	35.0' BEDROCK, Basalt	
			37	37.0' End of Boring	

Boring Log B-2 (1 OF 2)

JOB NO.: 210497.GPJ
PROJECT: M.T.U. Dock Repair — BORING NO.: B-2
CLIENT: U.P. Engineers & Architects — 1 OF 2
BORING LOCATION: 47.123131610878° N., -88.566357381771° W. - See soil boring location drawing — ELEV.:
RIG TYPE: Diedrich D-50 ATV — DRILL CREW: R. Ochs / B. Wilcox
DRILLING METHOD: 4-1/4" Hollow Stem Auger — BORING DEPTH: 26.1
DATE STARTED: 6/22/21 — DATE COMPLETED: 6/22/21 — REVIEWED BY: E. Shepeck — DATE: 6/29/21
HOLE CLOSURE: Bentonite Grout

NUMBER	SPT VALUES BLOWS/6"(N)	RECOVERY	DEPTH (FT)	SOIL DESCRIPTION	COMMENTS
			0	WATER	
1	4-5-8 (13)	1.1	17	17.0' (FILL) SILTY SAND WITH GRAVEL, black, fine to coarse, organic odor, wet	4-1/4" Hollow Stem Auger 17.0' to 22.0' 2" SPT Sampling 140# wt., 30" drop Auto Hammer
			18	± 18.0' (GC) CLAYEY GRAVEL WITH SAND, brown, fine to coarse, angular, wet, very dense	Driller's note: Cobbles and / or boulders 19.0' to 20.0'

Boring Log B-2 (2 OF 2)

JOB NO.: 210497.GPJ
PROJECT: M.T.U. Dock Repair — BORING NO.: B-2
CLIENT: U.P. Engineers & Architects — 2 OF 2
BORING LOCATION: 47.123131610878° N., -88.566357381771° W. - See soil boring location drawing — ELEV.:
RIG TYPE: Diedrich D-50 ATV — DRILL CREW: R. Ochs / B. Wilcox
DRILLING METHOD: 4-1/4" Hollow Stem Auger — BORING DEPTH: 26.1
DATE STARTED: 6/22/21 — DATE COMPLETED: 6/22/21 — REVIEWED BY: E. Shepeck — DATE: 6/29/21
HOLE CLOSURE: Bentonite Grout

NUMBER	SPT VALUES BLOWS/6"(N)	RECOVERY	DEPTH (FT)	SOIL DESCRIPTION	COMMENTS
2	27-44-65 (109)	1.3	20	(GC) CLAYEY GRAVEL WITH SAND, brown, fine to coarse, angular, wet, very dense	Driller's note: Cobbles and / or boulders 21.0' to 22.0'
3	15-16-23 (39)	0.8	21.5	(Glacial Till) ± 21.5' (GP) POORLY GRADED GRAVEL WITH SAND, brown, fine to coarse, angular to subrounded, some silt and clay, wet, dense	3" casing advancer 22.0' to 26.0'
4	7-50/0.4' (-)	0.1	25	...very dense	
5	50/0.1' (-)	0.1	26	(Glacial Till) 26.0' BEDROCK, Basalt	
			26.1	26.1' End of Boring	

Boring Log B-3 (1 OF 2)

JOB NO.: 210497.GPJ
PROJECT: M.T.U. Dock Repair — BORING NO.: B-3
CLIENT: U.P. Engineers & Architects — 1 OF 2
BORING LOCATION: 47.123094334198° N., -88.566741637820° W. - See soil boring location drawing — ELEV.:
RIG TYPE: Diedrich D-50 ATV — DRILL CREW: R. Ochs / B. Wilcox
DRILLING METHOD: 2-7/8" Roller Bit — BORING DEPTH: 23.0
DATE STARTED: 6/22/21 — DATE COMPLETED: 6/22/21 — REVIEWED BY: E. Shepeck — DATE: 6/29/21
HOLE CLOSURE: Bentonite Grout

NUMBER	SPT VALUES BLOWS/6"(N)	RECOVERY	DEPTH (FT)	SOIL DESCRIPTION	COMMENTS
			0	WATER	
1	3-1/1' (-)	0.4	15.5	15.5' (FILL) SILTY SAND WITH GRAVEL, brownish black, fine to coarse, organic odor, wet	3" casing advancer 15.5' to 20.5' 2" SPT Sampling 140# wt., 30" drop Auto Hammer
2	4-3-15 (18)	0.2	18	...trace amount of 1/4" glass fragments	
			20	± 20.0'	

Boring Log B-3 (2 OF 2)

JOB NO.: 210497.GPJ
PROJECT: M.T.U. Dock Repair — BORING NO.: B-3
CLIENT: U.P. Engineers & Architects — 2 OF 2
BORING LOCATION: 47.123094334198° N., -88.566741637820° W. - See soil boring location drawing — ELEV.:
RIG TYPE: Diedrich D-50 ATV — DRILL CREW: R. Ochs / B. Wilcox
DRILLING METHOD: 2-7/8" Roller Bit — BORING DEPTH: 23.0
DATE STARTED: 6/22/21 — DATE COMPLETED: 6/22/21 — REVIEWED BY: E. Shepeck — DATE: 6/29/21
HOLE CLOSURE: Bentonite Grout

NUMBER	SPT VALUES BLOWS/6"(N)	RECOVERY	DEPTH (FT)	SOIL DESCRIPTION	COMMENTS
3	20-50/0.3' (-)	0.2	20	(GP) POORLY SORTED GRAVEL WITH SAND, brownish gray, fine to coarse, angular to subrounded, wet, very dense	2-7/8" Roller Bit 20.5' to 23.0'
4	50/0' (-)	NR	22.5	(Glacial Till) 22.5' BEDROCK, Basalt	
			23	23.0' End of Boring	

Legend (all logs): AS-Auger Sample; BS-Bag Sample; RC-Rock-Core; MC-Macrocore; PS-Piston Tube; 2SS-2" Split Spoon; 3SS-3" Split Spoon; 2ST-2" Shelby Tube; 3ST-3" Shelby Tube; while drilling; after drilling; after ___ hours. Test results columns: +4 / -4 / -200; Moisture Content (%); LL / PL; T (tsf); q_a (tsf) / q_u (tsf).

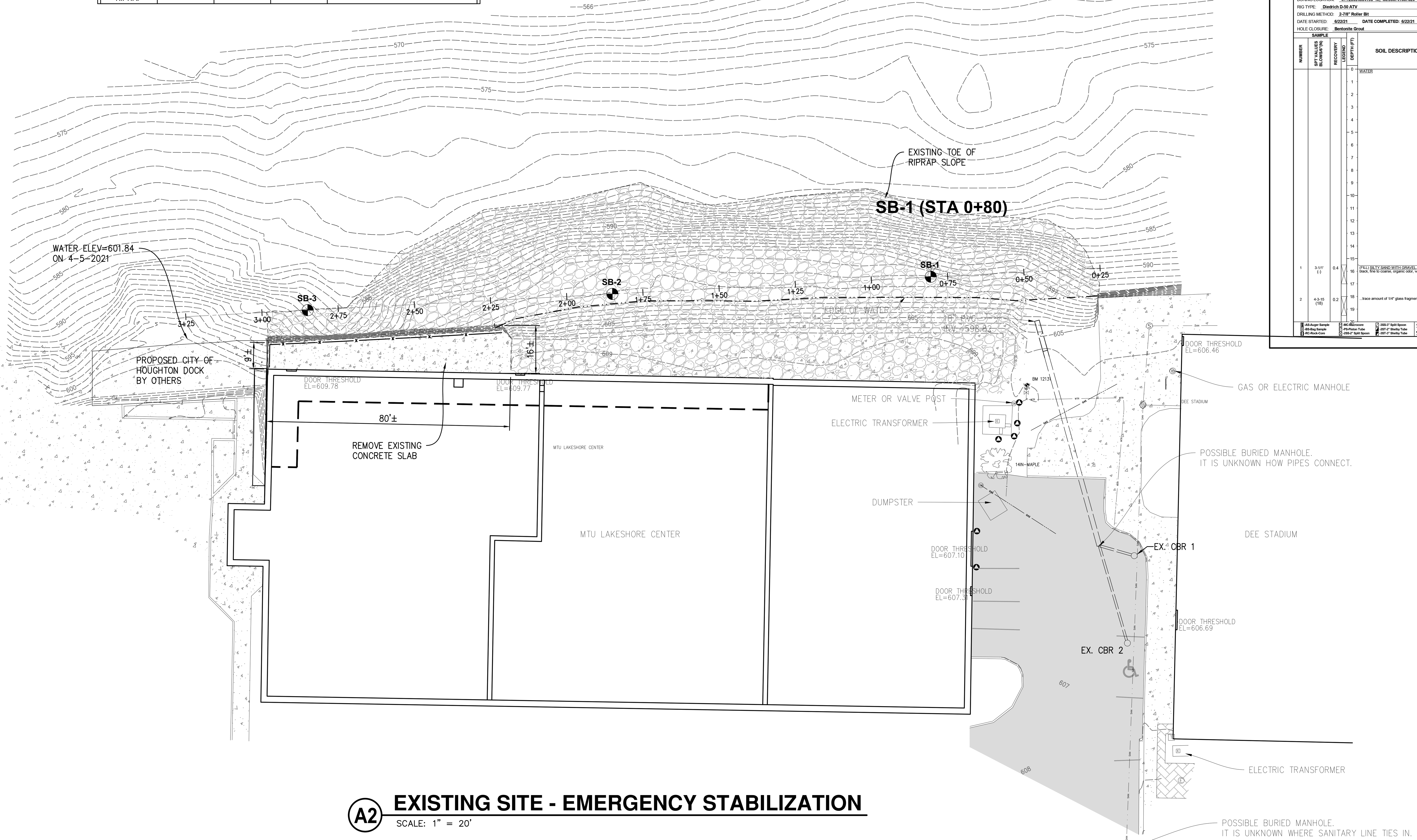

A2 EXISTING SITE - EMERGENCY STABILIZATION
SCALE: 1" = 20'

SANITARY SEWER STRUCTURE TABLE

STRUCTURE NAME	PROP RIM ELEV	MH DIA.	INVERTS
EX. SAN MH 1 (EX. RIM=605.486)	605.49	18 IN	EX. 6" PVC IN = 603.136 (E) EX. 6" PVC OUT = 603.096 (S)
EX. SAN MH 2 (EX. RIM=607.10)	607.10	48 IN	EX. 6" PVC IN = 603.242 (N) EX. 6" PVC IN = 602.802 (E) EX. 6" PVC OUT = 602.802 (S)

STORM SEWER STRUCTURE TABLE

STRUCTURE NAME	PROP RIM ELEV	SUMP DEPTH	MH DIA.	INVERTS
EX. CBR 1 (EX. RIM=605.93)	605.93	0 FT	2 FT	EX. 8" PVC INV OUT = 604.44 (W)
EX. CBR 2 (EX. RIM=606.02)	606.02	0 FT	2 FT	EX. 8" PVC INV OUT = 604.61 (N)
PROP MH	606.03	2 FT	4 FT	EX 18" INV IN = 599.57 (S) PROP 18" INV OUT = 599.57 (N)

UPEA ENGINEERS & ARCHITECTS
www.upea.com

MTU - LAKESHORE CENTER SEAWALL REPAIR/REPLACEMENT PLAN
MICHIGAN TECHNOLOGICAL UNIVERSITY
CITY OF HOUGHTON, MICHIGAN

ISSUED FOR:	DATE:
RECOMENDATION LETTER	09/27/21
PERMIT APPLICATION	06/16/22
REVISED PERMIT APPLICATION	08/18/22
REVISED PERMIT APPLICATION	10/26/22
BIDDING & CONSTRUCTION	11/04/22

MTU - LAKESHORE CENTER SEAWALL REPAIR/REPLACEMENT PLAN
MICHIGAN TECHNOLOGICAL UNIVERSITY

PROJECT NO: M40-01265
DESIGNED BY: G.A.K./M.P.H.
DRAWN BY: L.G.H./P.A.K.
CHECKED: G.A.K.
APPROVED: G.A.K.

EXISTING SITE/DEMO PLAN

PHASE II

C101

11/10/2022 1:46 PM
P:\M40-01265 MTU-MTU - LAKESHORE CENTER SEAWALL REPAIRS\DWGS\M40-01265 BASE.DWG

© U.P. Engineers & Architects, Inc.

CONTROL POINT DATA			
I.D.	DESCRIPTION	NORTHING	EASTING
CP8167	8167 – PK NAIL W/TAG IN BIT	856995.83	25856651.08
CP8168	8168 – PK NAIL W/TAG IN BIT	856839.03	25856688.87
CP11108	11108 – X ON CONCRETE	857065.92	25856689.97
CP11109	11109 – SPIKE IN GRASS	857062.21	25856950.05
CP11110	11110 – PK NAIL W/TAG IN BIT	856897.08	25856968.37
CP15000		857079.47	25856980.56

BENCHMARK DATA			
I.D.	DESCRIPTION	ELEVATION	LOCATION
BM 12131	BM–TOP–HYD	610.05	TOP OF TOP NUT ON HYDRANT

SANITARY SEWER STRUCTURE TABLE			
STRUCTURE NAME	PROP RIM ELEV	MH DIA.	INVERTS
EX. SAN MH 1 (EX. RIM=605.486)	605.49	18 IN	EX. 6" PVC IN = 603.136 (E) EX. 6" PVC OUT = 603.096 (S)
EX. SAN MH 2 (EX. RIM=607.10)	607.10	48 IN	EX. 6" PVC IN = 603.242 (N) EX. 6" PVC IN = 602.802 (E) EX. 6" PVC OUT = 602.802 (S)

STORM SEWER STRUCTURE TABLE				
STRUCTURE NAME	PROP RIM ELEV	SUMP DEPTH	MH DIA.	INVERTS
EX. CBR 1 (EX. RIM=605.93)	605.93	0 FT	2 FT	EX. 8" PVC INV OUT = 604.44 (W)
EX. CBR 2 (EX. RIM=606.02)	606.02	0 FT	2 FT	EX. 8" PVC INV OUT = 604.61 (N)
PROP MH	606.03	2 FT	4 FT	EX 18" INV IN = 599.57 (S) PROP 18" INV OUT = 599.57 (N)

WATER LEVELS
- EL=603.40 MAX RECORDED (OCT, 1985)
- EL=603.10 ORDINARY HIGH WATER MARK (USACE)
- EL=602.60 ORDINARY HIGH WATER MARK (MDEQ)
- EL=602.17 AVG YEARLY HIGH (SEPTEMBER)
- EL=601.84 APRIL 2021
- EL=601.18 AVG YEARLY LOW (MARCH)
- EL=601.10 LOW WATER (CHART) DATUM
- EL=599.54 MIN. RECORDED (APRIL, 1926)

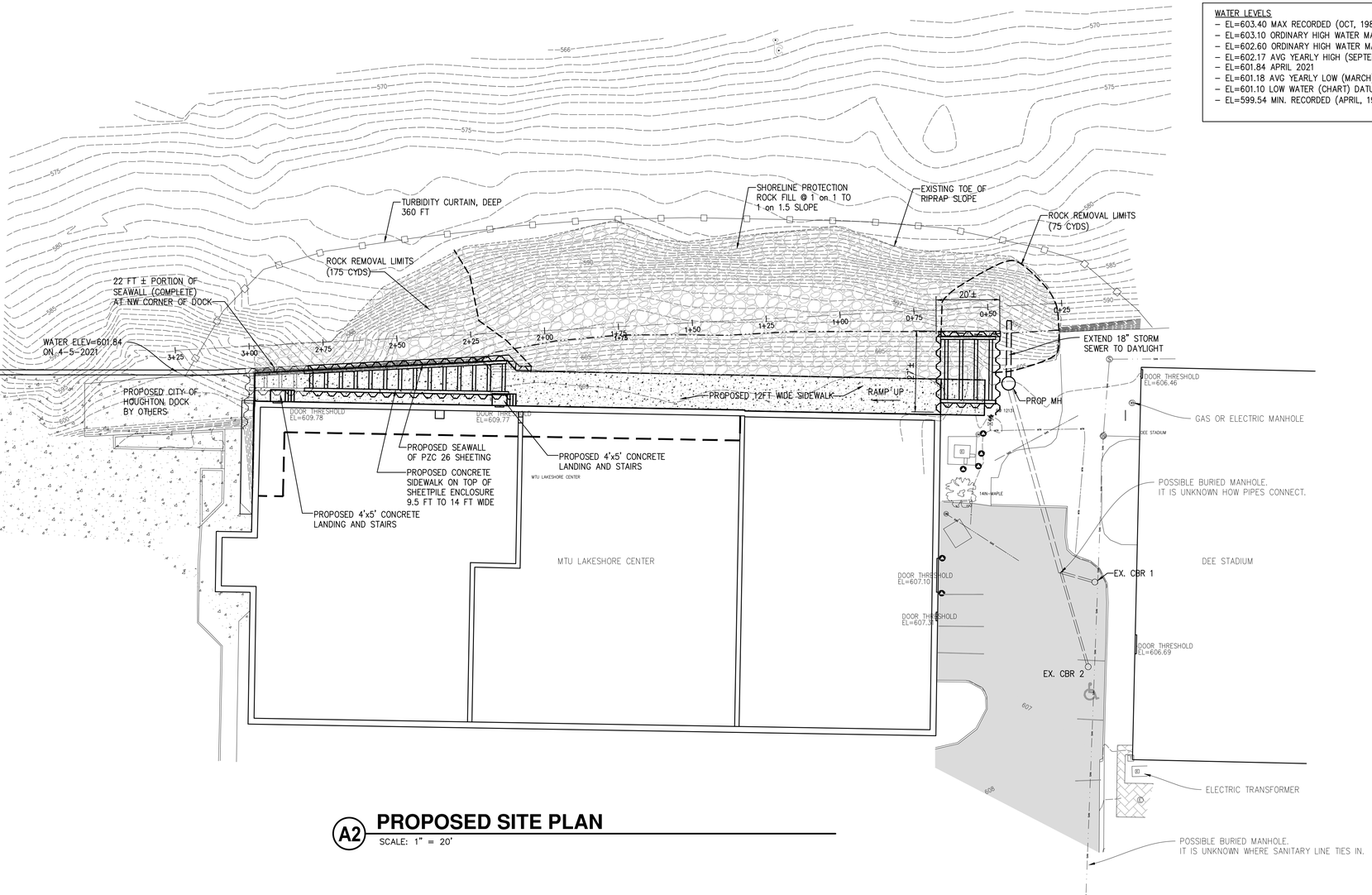

A2 PROPOSED SITE PLAN
SCALE: 1" = 20'

QUANTITIES THIS SHEET (INFORMATION ONLY)				
ITEM	AVERAGE LENGTH	AVERAGE WIDTH	AVERAGE DEPTH	VOLUME
EXISTING RIPRAP	230'	50'	3.5'	1490 CYD
TOE STONE	75'	14'	3'	120 CYD
SEAWALL BACKFILL	250'	12'	2'	220 CYD

GRAPHIC SCALE
0 10 20 40
(IN FEET)
1 inch = 20 ft.

UPEA ENGINEERS & ARCHITECTS
www.upea.com

MTU - LAKESHORE CENTER SEAWALL REPAIR/REPLACEMENT PLAN
MICHIGAN TECHNOLOGICAL UNIVERSITY
CITY OF HOUGHTON, MICHIGAN

ISSUED FOR:	DATE:
RECOMENDATION LETTER	09/27/21
PERMIT APPLICATION	06/16/22
REVISED PERMIT APPLICATION	08/18/22
BIDDING & CONSTRUCTION	10/07/22
BIDDING & CONSTRUCTION	11/04/22

MTU - LAKESHORE CENTER SEAWALL REPAIR/REPLACEMENT PLAN
MICHIGAN TECHNOLOGICAL UNIVERSITY

PROJECT NO: M40-01265

DESIGNED BY: G.A.K./M.P.H.
DRAWN BY: L.G.H./P.A.K.
CHECKED: G.A.K.
APPROVED: G.A.K.

PROPOSED SITE PLAN

PHASE II

C102

© U.P. Engineers & Architects, Inc.

11/10/2022 1:46 PM P:\M40-01265 MTU-MTU - LAKESHORE CENTER SEAWALL REPAIR\DWGS\M40-01265 BASE.DWG

CONTROL POINT DATA			
I.D.	DESCRIPTION	NORTHING	EASTING
CP8167	8167 – PK NAIL W/TAG IN BIT	856995.83	25856651.08
CP8168	8168 – PK NAIL W/TAG IN BIT	856839.03	25856688.87
CP11108	11108 – X ON CONCRETE	857065.92	25856689.97
CP11109	11109 – SPIKE IN GRASS	857062.21	25856950.05
CP11110	11110 – PK NAIL W/TAG IN BIT	856897.08	25856968.37
CP15000		857079.47	25856980.56

BENCHMARK DATA			
I.D.	DESCRIPTION	ELEVATION	LOCATION
BM 12131	BM–TOP–HYD	610.05	TOP OF TOP NUT ON HYDRANT

SANITARY SEWER STRUCTURE TABLE			
STRUCTURE NAME	PROP RIM ELEV	MH DIA.	INVERTS
EX. SAN MH 1 (EX. RIM=605.486)	605.49	18 IN	EX. 6" PVC IN = 603.136 (E) EX. 6" PVC OUT = 603.096 (S)
EX. SAN MH 2 (EX. RIM=607.10)	607.10	48 IN	EX. 6" PVC IN = 603.242 (N) EX. 6" PVC IN = 602.802 (E) EX. 6" PVC OUT = 602.802 (S)

STORM SEWER STRUCTURE TABLE				
STRUCTURE NAME	PROP RIM ELEV	SUMP DEPTH	MH DIA.	INVERTS
EX. CBR 1 (EX. RIM=605.93)	605.93	0 FT	2 FT	EX. 8" PVC INV OUT = 604.44 (W)
EX. CBR 2 (EX. RIM=606.02)	606.02	0 FT	2 FT	EX. 8" PVC INV OUT = 604.61 (N)
PROP MH	606.03	2 FT	4 FT	EX 18" INV IN = 599.57 (S) PROP 18" INV OUT = 599.57 (N)

WATER LEVELS
- EL=603.40 MAX RECORDED (OCT, 1985)
- EL=603.10 ORDINARY HIGH WATER MARK (USACE)
- EL=602.60 ORDINARY HIGH WATER MARK (MDEQ)
- EL=602.17 AVG YEARLY HIGH (SEPTEMBER)
- EL=601.84 APRIL 2021
- EL=601.18 AVG YEARLY LOW (MARCH)
- EL=601.10 LOW WATER (CHART) DATUM
- EL=599.54 MIN. RECORDED (APRIL, 1926)

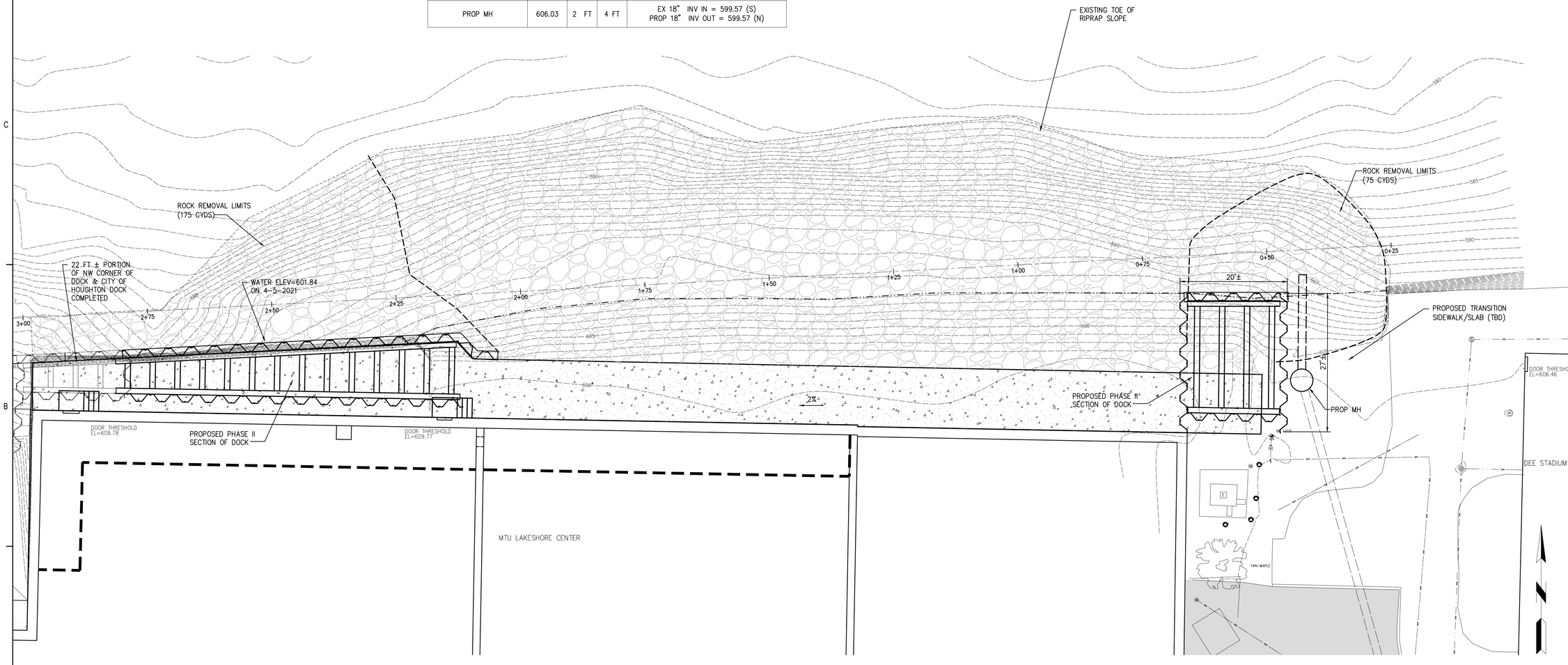

MTU - LAKESHORE CENTER SEAWALL REPAIR/REPLACEMENT PLAN
MICHIGAN TECHNOLOGICAL UNIVERSITY
CITY OF HOUGHTON, MICHIGAN

UPEA ENGINEERS & ARCHITECTS
www.upea.com

ISSUED FOR:	DATE:
RECOMENDATION LETTER	09/27/21
PERMIT APPLICATION	06/16/22
REVISED PERMIT APPLICATION	08/18/22
REVISED PERMIT APPLICATION	11/09/22
BIDDING & CONSTRUCTION	11/04/22

MTU - LAKESHORE CENTER SEAWALL REPAIR/REPLACEMENT PLAN
MICHIGAN TECHNOLOGICAL UNIVERSITY

PROJECT NO: M40-01265
DESIGNED BY: G.A.K./M.P.H.
DRAWN BY: M.E.P./P.A.K.
CHECKED: G.A.K.
APPROVED: G.A.K.

PROPOSED GRADING PLAN
PHASE II

C103

© U.P. Engineers & Architects, Inc.

11/10/2022 1:47 PM P:\M40-01265 MTU-MTU - LAKESHORE CENTER SEAWALL REPAIR\SDWGS\M40-01265 BASE.DWG

CONTROL POINT DATA

I.D.	DESCRIPTION	NORTHING	EASTING
CP8167	8167 – PK NAIL W/TAG IN BIT	856995.83	25856651.08
CP8168	8168 – PK NAIL W/TAG IN BIT	856839.03	25856688.87
CP11108	11108 – X ON CONCRETE	857065.92	25856689.97
CP11109	11109 – SPIKE IN GRASS	857062.21	25856950.05
CP11110	11110 – PK NAIL W/TAG IN BIT	856897.08	25856968.37

BENCHMARK DATA

I.D.	DESCRIPTION	ELEVATION	LOCATION
BM 12131	BM-TOP-HYD	610.05	TOP OF TOP NUT ON HYDRANT

SANITARY SEWER STRUCTURE TABLE

STRUCTURE NAME	PROP RIM ELEV	MH DIA.	INVERTS
EX. SAN MH 1 (EX. RIM=605.486)	605.49	18 IN	EX. 6" PVC IN = 603.136 (E) EX. 6" PVC OUT = 603.096 (S)
EX. SAN MH 2 (EX. RIM=607.10)	607.10	48 IN	EX. 6" PVC IN = 603.242 (N) EX. 6" PVC IN = 602.802 (E) EX. 6" PVC OUT = 602.802 (S)

STORM SEWER STRUCTURE TABLE

STRUCTURE NAME	PROP RIM ELEV	SUMP DEPTH	MH DIA.	INVERTS
EX. CBR 1 (EX. RIM=605.93)	605.93	0 FT	2 FT	EX. 8" PVC INV OUT = 604.44 (W)
EX. CBR 2 (EX. RIM=606.02)	606.02	0 FT	2 FT	EX. 8" PVC INV OUT = 604.61 (N)

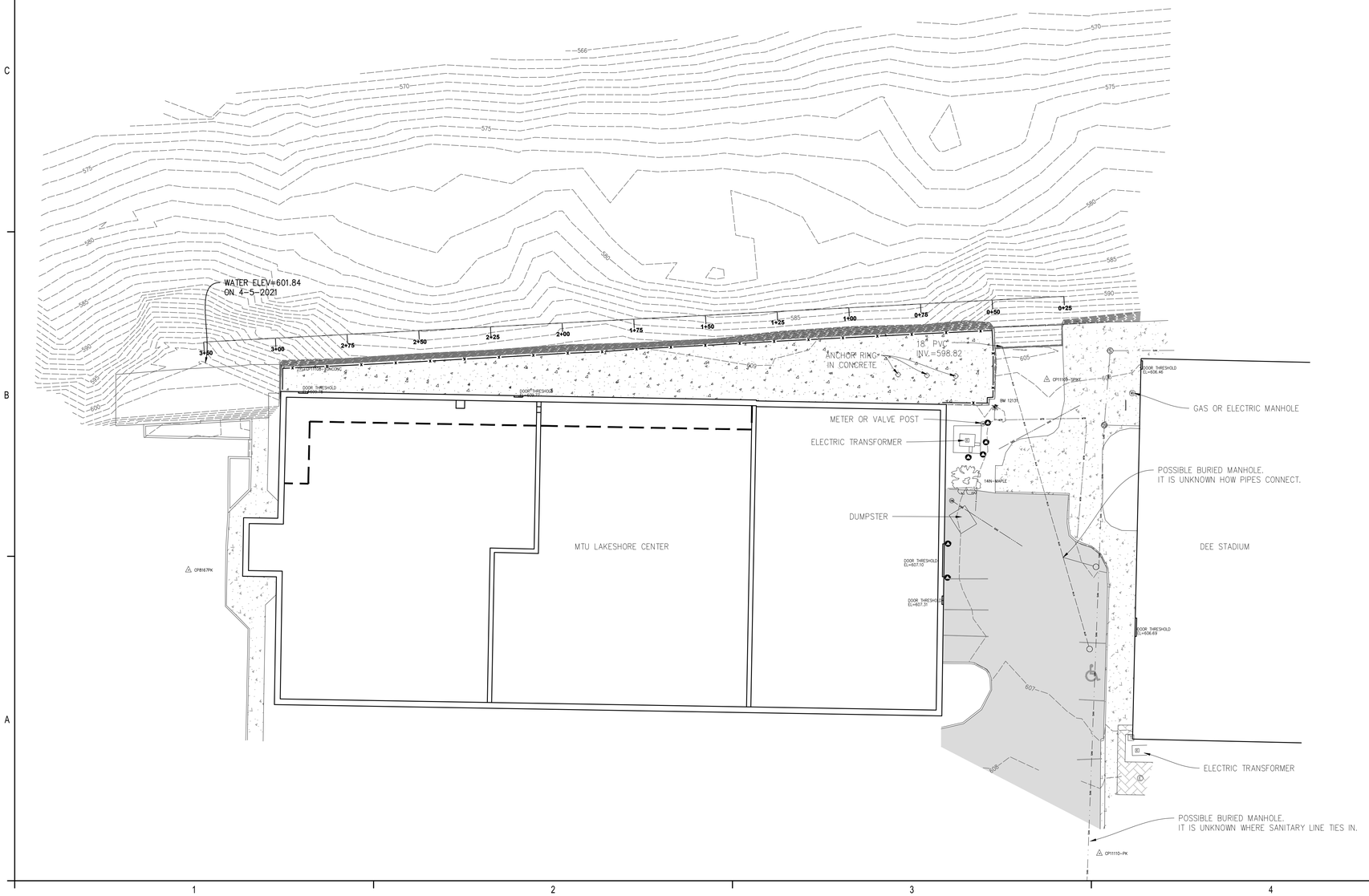

GRAPHIC SCALE
0 10 20 40
(IN FEET)
1 inch = 20 ft.

INFORMATION ONLY

UPEA ENGINEERS & ARCHITECTS
www.upea.com

MTU - LAKESHORE CENTER SEAWALL REPAIR/REPLACEMENT PLAN
MICHIGAN TECHNOLOGICAL UNIVERSITY
CITY OF HOUGHTON, MICHIGAN

ISSUED FOR:	DATE:
RECOMENDATION LETTER	09/27/21
PERMIT APPLICATION	06/16/22
REVISED PERMIT APPLICATION	08/18/22
REVISED PERMIT APPLICATION	10/26/22
BIDDING & CONSTRUCTION	11/04/22

MTU - LAKESHORE CENTER SEAWALL REPAIR/REPLACEMENT PLAN
MICHIGAN TECHNOLOGICAL UNIVERSITY
PROJECT NO: M40-01265

DESIGNED BY: G.A.K./M.P.H.
DRAWN BY: M.E.P./P.A.K.
CHECKED: G.A.K.
APPROVED: G.A.K.

EXISTING SITE PRE-COLLAPSE

PHASE I

C104

11/10/2022 1:47 PM
P:\M40-01265 MTU\MTU - LAKESHORE CENTER SEAWALL REPAIR\SDWGS\M40-01265 GRI.DWG

© U.P. Engineers & Architects, Inc.

CONTROL POINT DATA			
I.D.	DESCRIPTION	NORTHING	EASTING
CP8167	8167 – PK NAIL W/TAG IN BIT	856995.83	25856651.08
CP8168	8168 – PK NAIL W/TAG IN BIT	856839.03	25856688.87
CP11108	11108 – X ON CONCRETE	857065.92	25856689.97
CP11109	11109 – SPIKE IN GRASS	857062.21	25856950.05
CP11110	11110 – PK NAIL W/TAG IN BIT	856897.08	25856968.37

BENCHMARK DATA			
I.D.	DESCRIPTION	ELEVATION	LOCATION
BM 12131	BM–TOP–HYD	610.05	TOP OF TOP NUT ON HYDRANT

SANITARY SEWER STRUCTURE TABLE			
STRUCTURE NAME	PROP RIM ELEV	MH DIA.	INVERTS
EX. SAN MH 1 (EX. RIM=605.486)	605.49	18 IN	EX. 6" PVC IN = 603.136 (E) EX. 6" PVC OUT = 603.096 (S)
EX. SAN MH 2 (EX. RIM=607.10)	607.10	48 IN	EX. 6" PVC IN = 603.242 (N) EX. 6" PVC IN = 602.802 (E) EX. 6" PVC OUT = 602.802 (S)

STORM SEWER STRUCTURE TABLE				
STRUCTURE NAME	PROP RIM ELEV	SUMP DEPTH	MH DIA.	INVERTS
EX. CBR 1 (EX. RIM=605.93)	605.93	0 FT	2 FT	EX. 8" PVC INV OUT = 604.44 (W)
EX. CBR 2 (EX. RIM=606.02)	606.02	0 FT	2 FT	EX. 8" PVC INV OUT = 604.61 (N)

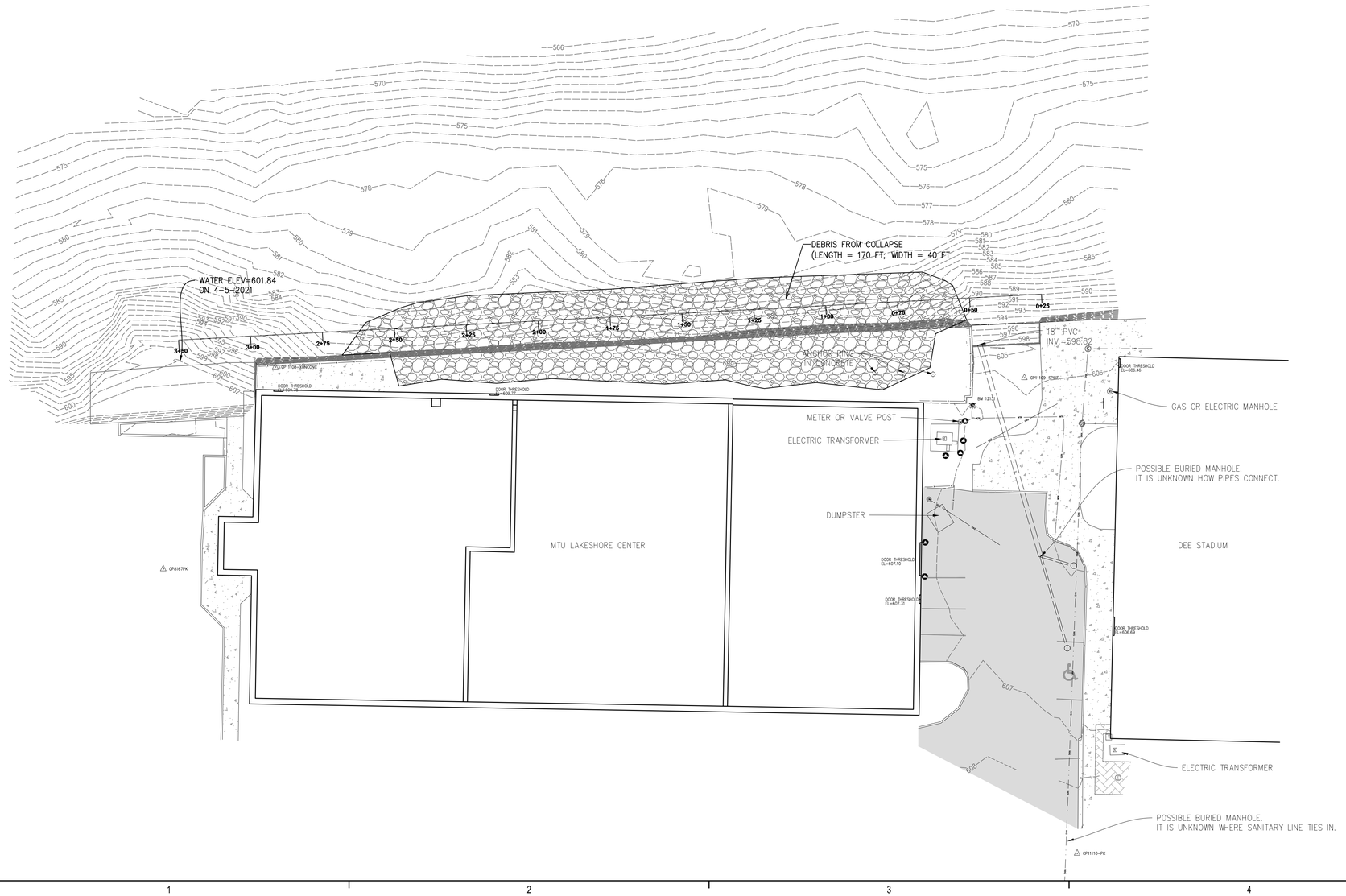

QUANTITIES THIS SHEET (INFORMATION ONLY)				
ITEM	AVERAGE LENGTH	AVERAGE WIDTH	AVERAGE DEPTH	VOLUME
DEBRIS FROM COLLAPSE	170'	40'	10'	2520 CYD

GRAPHIC SCALE
0 10 20 40
(IN FEET)
1 inch = 20 ft.

UPEA ENGINEERS & ARCHITECTS
www.upea.com

MTU - LAKESHORE CENTER SEAWALL REPAIR/REPLACEMENT PLAN
MICHIGAN TECHNOLOGICAL UNIVERSITY
CITY OF HOUGHTON, MICHIGAN

ISSUED FOR:	DATE:
RECOMENDATION LETTER	09/27/21
PERMIT APPLICATION	06/16/22
REVISED PERMIT APPLICATION	08/18/22
REVISED PERMIT APPLICATION	10/17/22
BIDDING & CONSTRUCTION	11/04/22

MTU - LAKESHORE CENTER SEAWALL REPAIR/REPLACEMENT PLAN
MICHIGAN TECHNOLOGICAL UNIVERSITY
PROJECT NO: M40-01265

DESIGNED BY: G.A.K./M.P.H.
DRAWN BY: M.E.P./P.A.K.
CHECKED: G.A.K.
APPROVED: G.A.K.

EXISTING SITE POST COLLAPSE

PHASE I

C105

© U.P. Engineers & Architects, Inc.

11/10/2022 1:48 PM P:\M40-01265 MTU\MTU - LAKESHORE CENTER SEAWALL REPAIRS\DWGS\EMERGENCY LS CENTER DWGS\PERMIT EXHIBITS.DWG

WATER LEVELS
- EL=603.40 MAX RECORDED (OCT, 1985)
- EL=603.10 ORDINARY HIGH WATER MARK (USACE)
- EL=602.60 ORDINARY HIGH WATER MARK (MDEQ)
- EL=602.17 AVG YEARLY HIGH (SEPTEMBER)
- EL=601.84 APRIL 2021
- EL=601.18 AVG YEARLY LOW (MARCH)
- EL=601.10 LOW WATER (CHART) DATUM
- EL=599.54 MIN. RECORDED (APRIL, 1926)

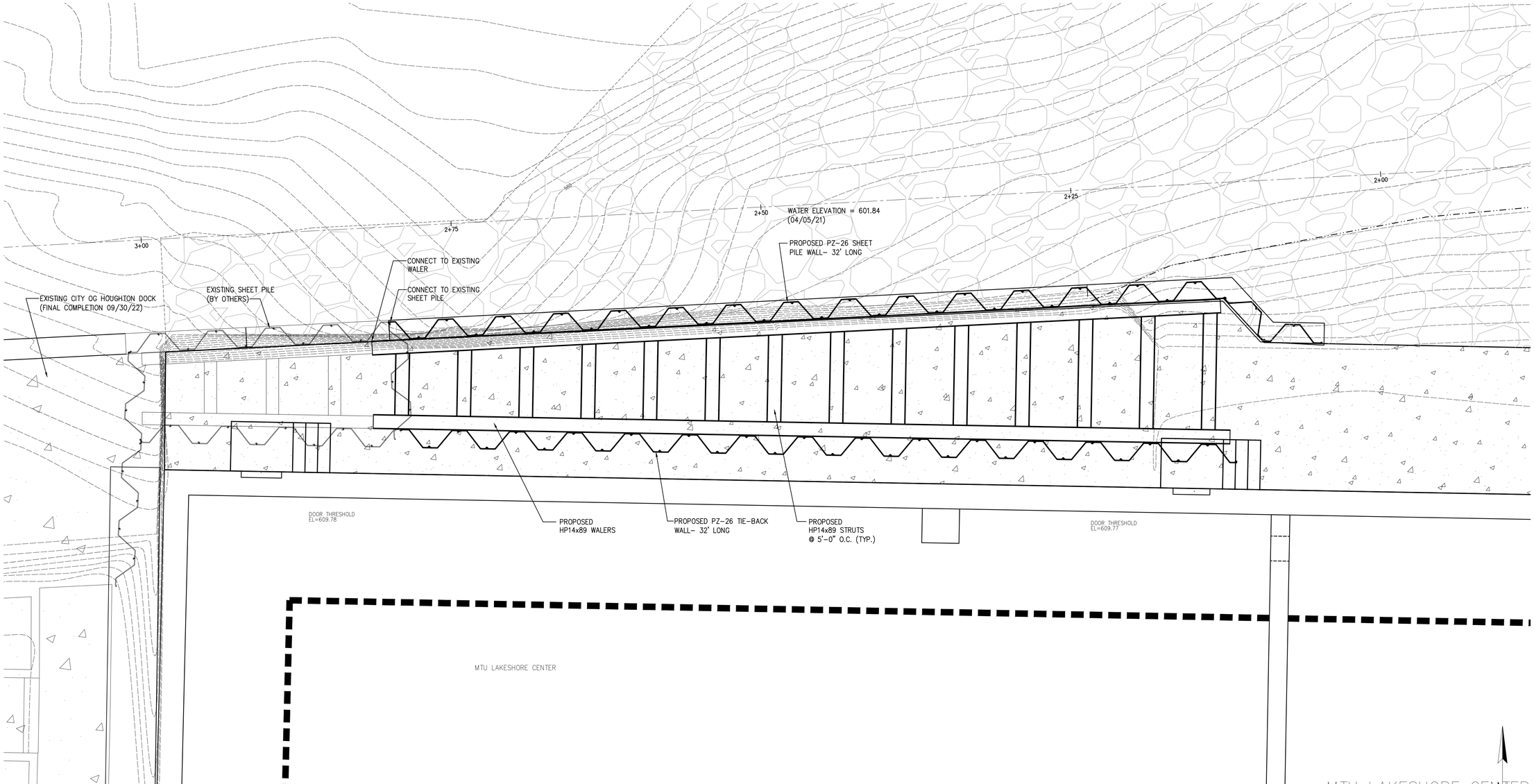

GRAPHIC SCALE
0 2 4 8
(IN FEET)
1 inch = 4 ft.

UPEA ENGINEERS & ARCHITECTS
www.upea.com

MTU - LAKESHORE CENTER SEAWALL REPAIR/REPLACEMENT PLAN
MICHIGAN TECHNOLOGICAL UNIVERSITY
CITY OF HOUGHTON, MICHIGAN

ISSUED FOR:	DATE:
RECOMENDATION LETTER	09/27/21
PERMIT APPLICATION	06/16/22
REVISED PERMIT APPLICATION	08/18/22
100% CONSTRUCTION	10/07/22
BIDDING & CONSTRUCTION	11/04/22

MTU - LAKESHORE CENTER SEAWALL REPAIR/REPLACEMENT PLAN
MICHIGAN TECHNOLOGICAL UNIVERSITY

PROJECT NO: M40-01265
DESIGNED BY: G.A.K./M.P.H.
DRAWN BY: M.E.P./P.A.K.
CHECKED: G.A.K.
APPROVED: G.A.K.

SHEET PILE PLAN

PHASE II

S101

© U.P. Engineers & Architects, Inc.

11/10/2022 1:48 PM
P:\M40-01265 MTU\MTU - LAKESHORE CENTER SEAWALL REPAIRS\DWGS\M40-01265 BASE.DWG

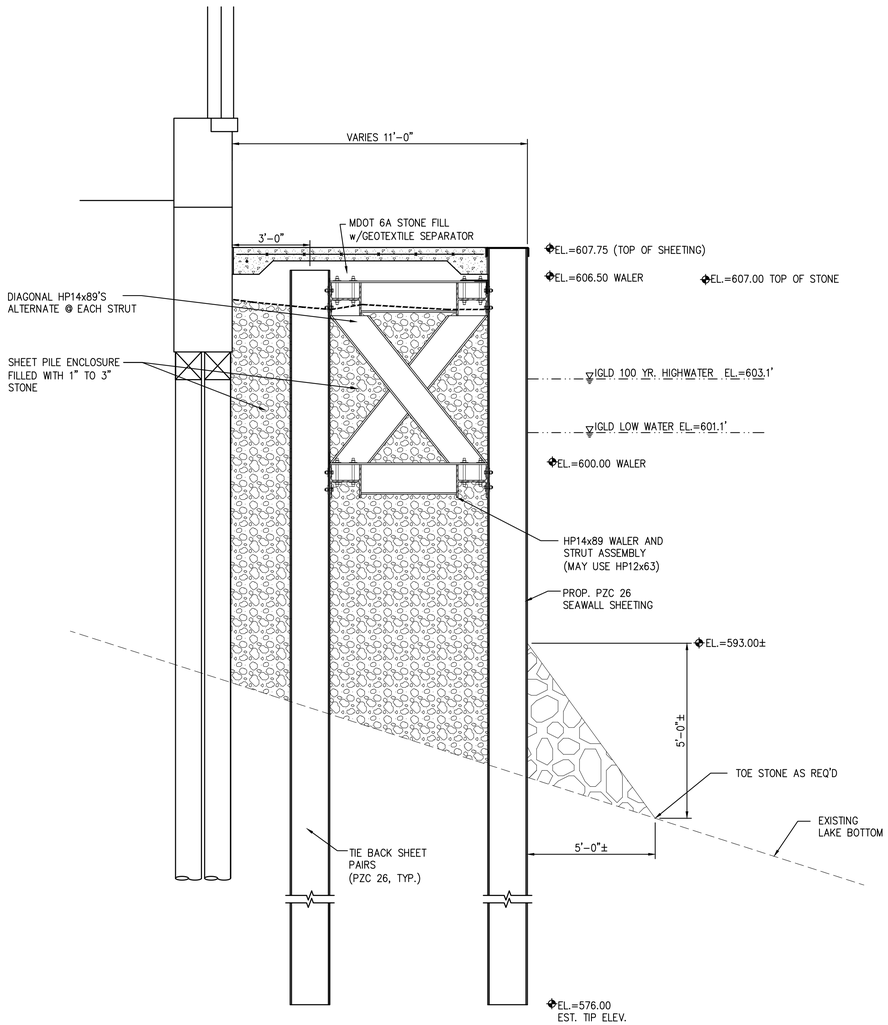

B2 SECTION @ SHEETING (2+90)

SCALE: 3/8" = 1'-0"

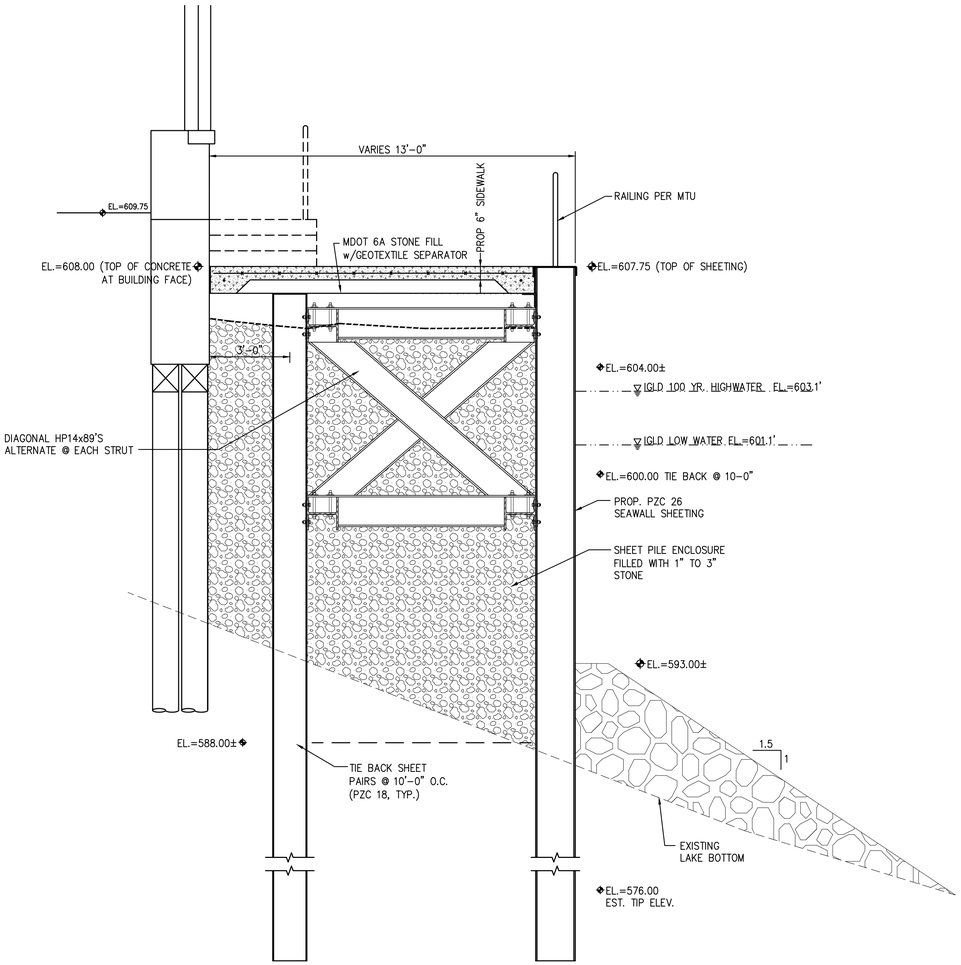

B4 SECTION @ SHEETING (2+25)

SCALE: 3/8" = 1'-0"

UPEA ENGINEERS & ARCHITECTS
www.upea.com

MTU - LAKESHORE CENTER SEAWALL
REPAIR/REPLACEMENT PLAN
MICHIGAN TECHNOLOGICAL UNIVERSITY
CITY OF HOUGHTON, MICHIGAN

ISSUED FOR:	DATE:
RECOMENDATION LETTER	09/27/21
PERMIT APPLICATION	06/16/22
REVISED PERMIT APPLICATION	08/18/22
REVISED PERMIT APPLICATION	10/28/22
BIDDING & CONSTRUCTION	11/04/22

MTU - LAKESHORE CENTER SEAWALL
REPAIR/REPLACEMENT PLAN
MICHIGAN TECHNOLOGICAL UNIVERSITY

PROJECT NO: M40-01265

DESIGNED BY: G.A.K./M.P.H.
DRAWN BY: M.E.P./P.A.K.
CHECKED: G.A.K.
APPROVED: G.A.K.

PIER SECTIONS

PHASE II

S301

© U.P. Engineers & Architects, Inc.

11/10/2022 1:48 PM
P:\M40-01265-MTU\MTU - LAKESHORE CENTER SEAWALL REPAIR\DWGS\M40-01265 S0005.DWG

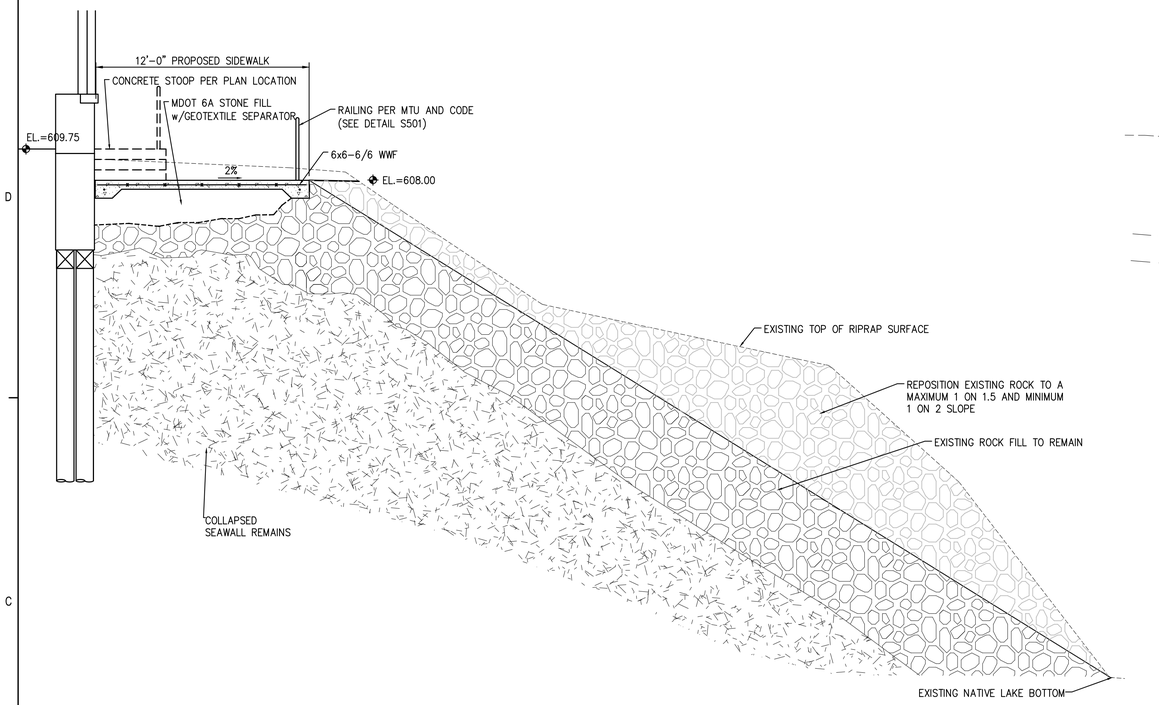

C2 SECTION @ STATION 1+50
SCALE: 1/4" = 1'-0"

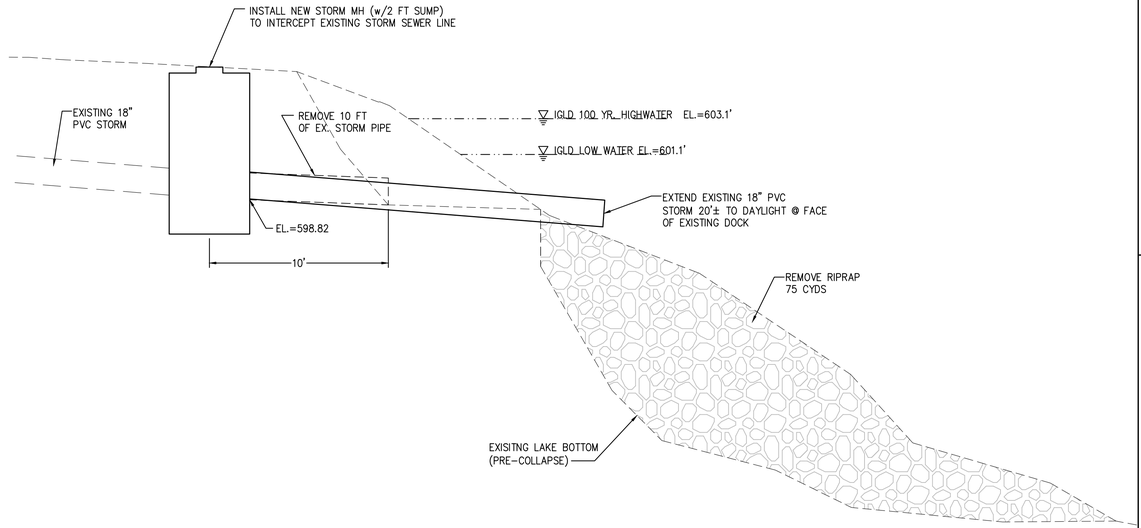

B2 SECTION @ STATION 0+40
SCALE: 1/4" = 1'-0"

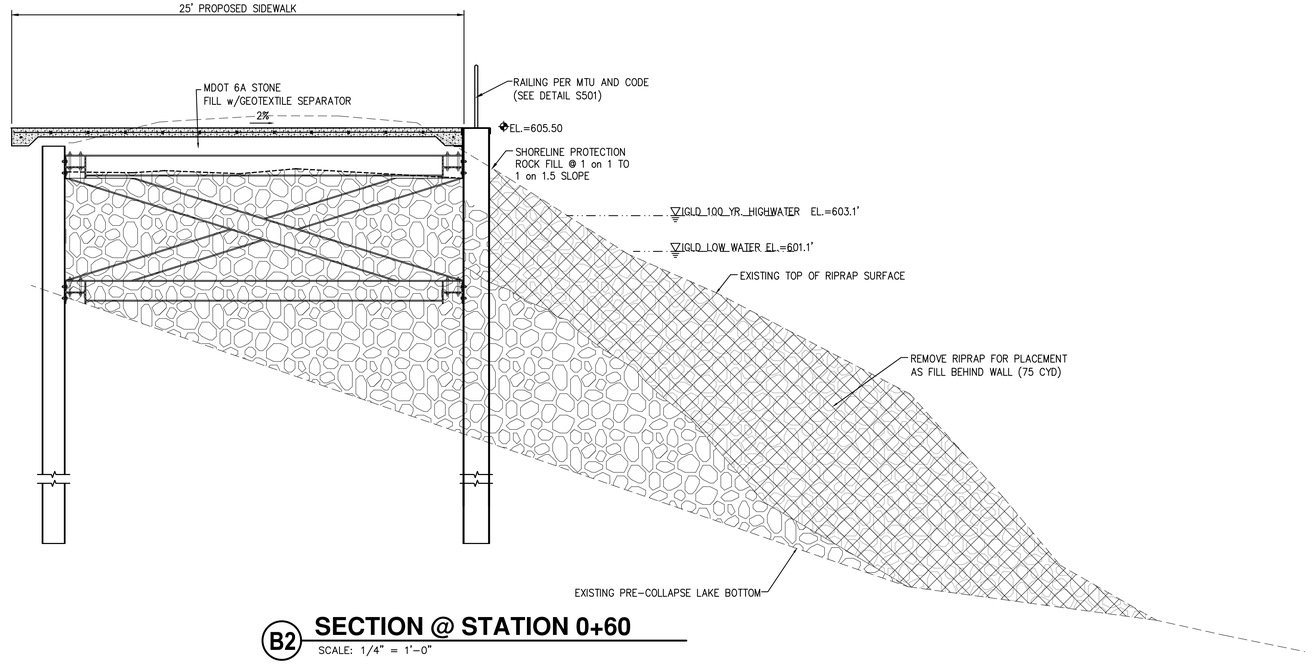

B2 SECTION @ STATION 0+60
SCALE: 1/4" = 1'-0"

U.P.E.A. ENGINEERS & ARCHITECTS
www.upea.com

MTU - LAKESHORE CENTER SEAWALL
REPAIR/REPLACEMENT PLAN
MICHIGAN TECHNOLOGICAL UNIVERSITY
CITY OF HOUGHTON, MICHIGAN

ISSUED FOR:	DATE:
RECOMENDATION LETTER	09/27/21
PERMIT APPLICATION	06/16/22
REVISED PERMIT APPLICATION	08/18/22
REVISED PERMIT APPLICATION	10/07/22
BIDDING & CONSTRUCTION	11/04/22

MTU - LAKESHORE CENTER SEAWALL
REPAIR/REPLACEMENT PLAN
MICHIGAN TECHNOLOGICAL UNIVERSITY

PROJECT NO: M40-01265

DESIGNED BY: G.A.K./M.P.H.
DRAWN BY: M.E.P./P.A.K.
CHECKED: G.A.K.
APPROVED: G.A.K.

PIER SECTIONS

PHASE II

S302

P:\M40-01265 MTU-MTU - LAKESHORE CENTER SEAWALL REPAIRS\DWG\S\M40-01265 S5005.DWG
11/10/2022 1:49 PM

© U.P. Engineers & Architects, Inc.

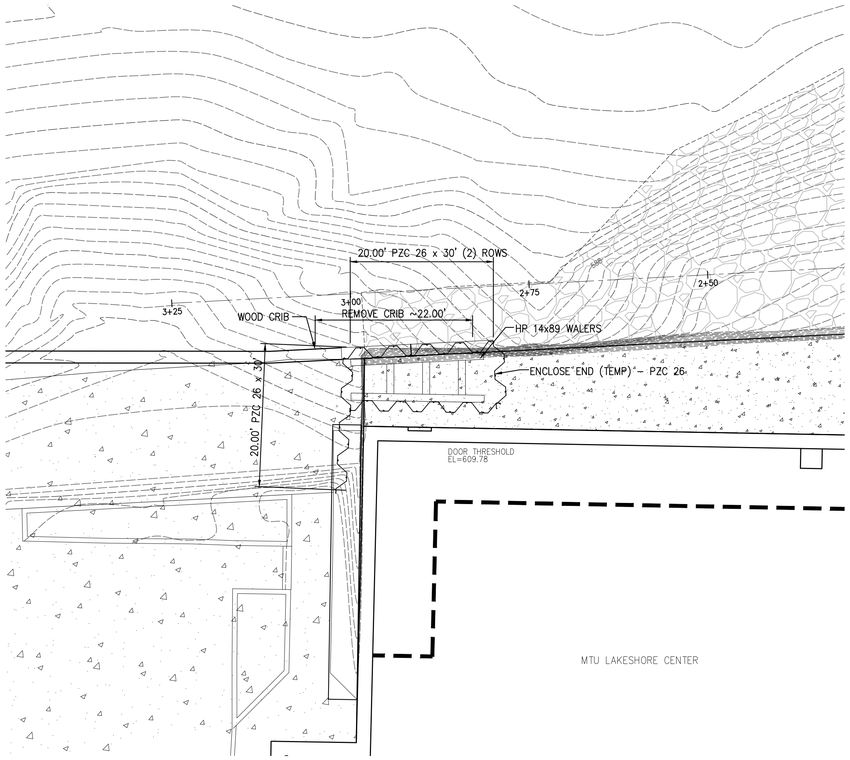

C1 SHEET PILE CORNER ENCLOSURE
1"=10' PLAN

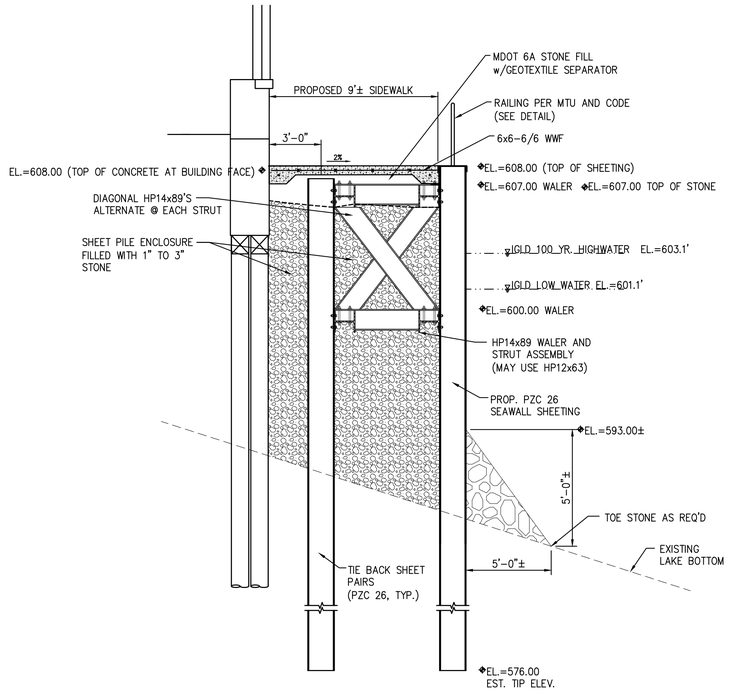

C4 SHEET PILE CORNER ENCLOSURE
1/4" = 1'-0" SECTION

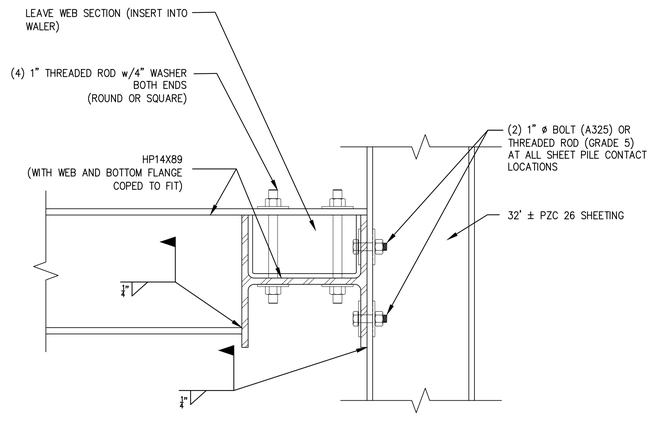

A1 WALER-STRUT CONNECTION
1 1/2" = 1'-0" SECTION

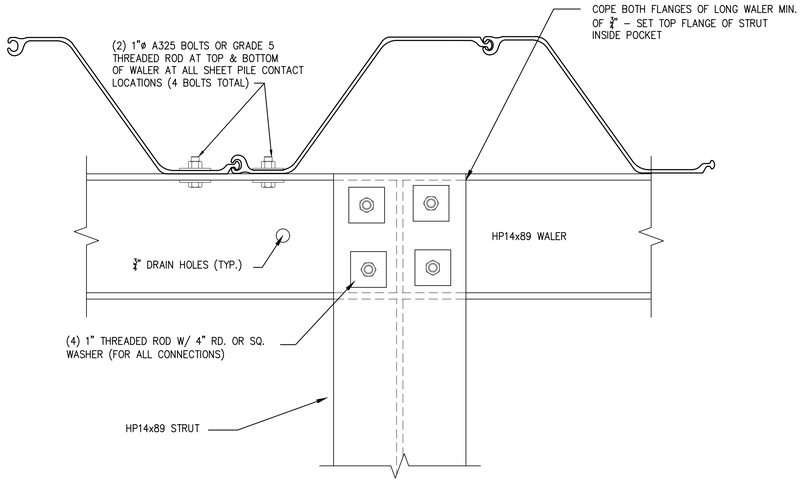

A3 WALER-STRUT CONNECTION
1 1/2" = 1'-0" PLAN VIEW

GRAPHIC SCALE
0 10 20 40
(IN FEET)
1 inch = 20 ft.

WORK ON THIS SHEET BY OTHERS

UPEA ENGINEERS & ARCHITECTS
www.upea.com

MTU - LAKESHORE CENTER SEAWALL REPAIR/REPLACEMENT PLAN
MICHIGAN TECHNOLOGICAL UNIVERSITY
CITY OF HOUGHTON, MICHIGAN

ISSUED FOR:	DATE:
RECOMENDATION LETTER	09/27/21
PERMIT APPLICATION	06/16/22
PERMIT AMENDMENT	5/17/22
REVISED PERMIT APPLICATION	10/07/22
BIDDING & CONSTRUCTION	11/04/22

MTU - LAKESHORE CENTER SEAWALL REPAIR/REPLACEMENT PLAN
MICHIGAN TECHNOLOGICAL UNIVERSITY

PROJECT NO: M40-01265

DESIGNED BY: G.A.K./M.P.H.
DRAWN BY: L.G.H./P.A.K.
CHECKED: G.A.K.
APPROVED: G.A.K.

SHEET PILE AT NW CORNER

PHASE II

S303

11/10/2022 1:49 PM P:\M40-01265 MTU\ATU - LAKESHORE CENTER SEAWALL REPAIRS\DWGS\M40-01265 BASE.DWG

© U.P. Engineers & Architects, Inc.

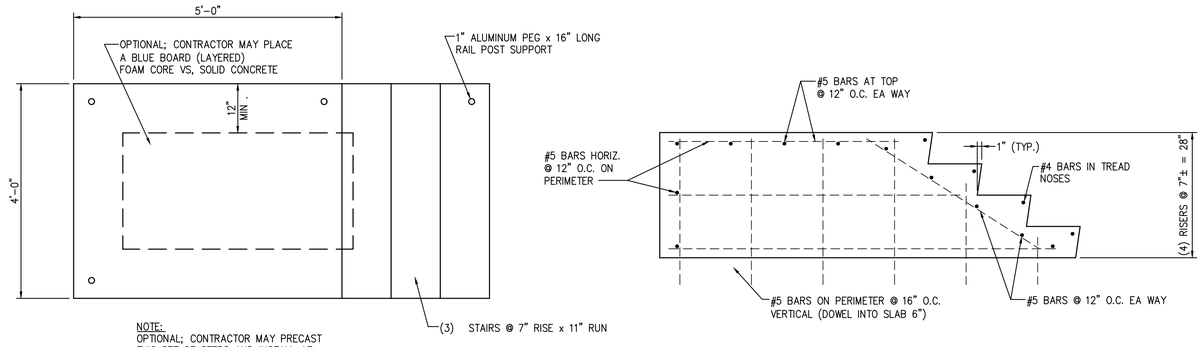

A3 LANDING & STAIR DETAIL

SCALE: 3/4" = 1'-0"

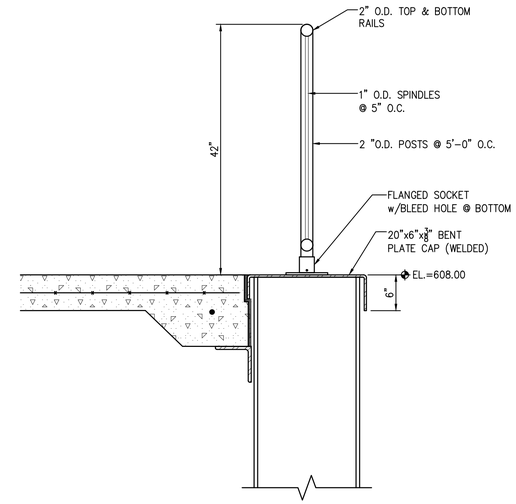

D5 SHEET PILE CAP/RAILING DETAIL

SCALE: 1" = 1'-0"

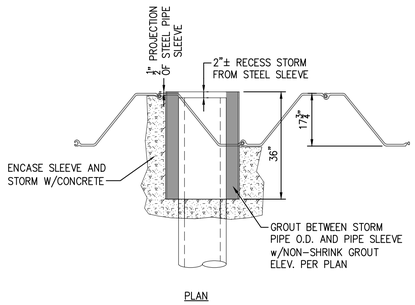

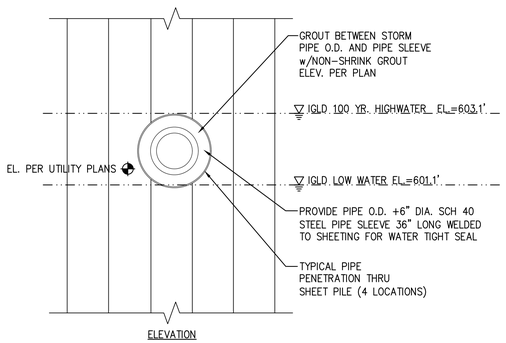

A1 TYPICAL PIPE PENETRATION THRU SHEET PILE

SCALE: 1/2" = 1'-0"

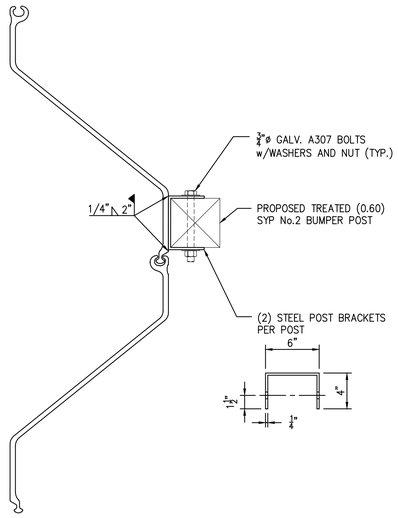

B3 POST BRACKET DETAIL (N.I.C.)

SCALE: 1 1/2" = 1'-0"

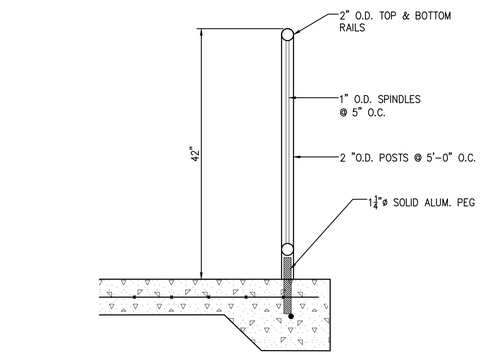

C5 RAILING DETAIL

SCALE: 1" = 1'-0"

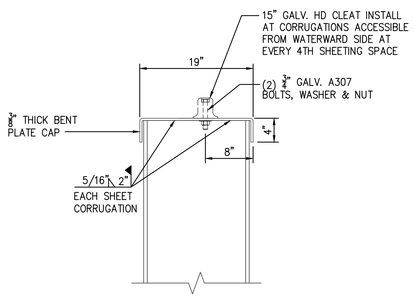

A3 MOORING CLEAT DETAIL (N.I.C.)

SCALE: 1" = 1'-0"

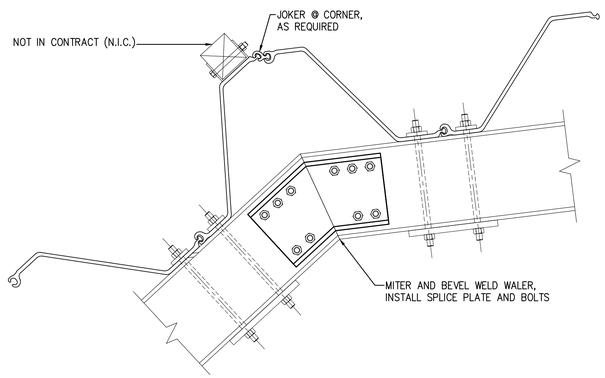

A5 WALER CORNER SPLICE DETAIL

SCALE: 1" = 1'-0"

U.P. ENGINEERS & ARCHITECTS
www.upea.com

MTU - LAKESHORE CENTER SEAWALL REPAIR/REPLACEMENT PLAN
MICHIGAN TECHNOLOGICAL UNIVERSITY
CITY OF HOUGHTON, MICHIGAN

ISSUED FOR:	DATE:
RECOMENDATION LETTER	09/27/21
PERMIT APPLICATION	06/16/22
REVISED PERMIT APPLICATION	08/18/22
REVISED PERMIT APPLICATION	10/07/22
BIDDING & CONSTRUCTION	11/04/22

MTU - LAKESHORE CENTER SEAWALL REPAIR/REPLACEMENT PLAN
MICHIGAN TECHNOLOGICAL UNIVERSITY
PROJECT NO: M40-01265

DESIGNED BY: G.A.K./M.P.H.
DRAWN BY: M.E.P./P.A.K.
CHECKED: G.A.K.
APPROVED: G.A.K.

STRUCTURAL DETAILS

PHASE II

S501

© U.P. Engineers & Architects, Inc.

11/10/2022 1:49 PM
P:\M40-01265 MTU-MTU - LAKESHORE CENTER SEAWALL REPAIRS\DWGS\M40-01265 S5005.DWG

CONTROL POINT DATA

I.D.	DESCRIPTION	NORTHING	EASTING
CP8167	8167 – PK NAIL W/TAG IN BIT	856995.83	25856651.08
CP8168	8168 – PK NAIL W/TAG IN BIT	856839.03	25856688.87
CP11108	11108 – X ON CONCRETE	857065.92	25856689.97
CP11109	11109 – SPIKE IN GRASS	857062.21	25856950.05
CP11110	11110 – PK NAIL W/TAG IN BIT	856897.08	25856968.37
CP15000		857079.47	25856980.56

BENCHMARK DATA

I.D.	DESCRIPTION	ELEVATION	LOCATION
BM 12131	BM-TOP-HYD	610.05	TOP OF TOP NUT ON HYDRANT

SANITARY SEWER STRUCTURE TABLE

STRUCTURE NAME	PROP RIM ELEV	MH DIA.	INVERTS
EX. SAN MH 1 (EX. RIM=605.486)	605.49	18 IN	EX. 6" PVC IN = 603.136 (E) EX. 6" PVC OUT = 603.096 (S)
EX. SAN MH 2 (EX. RIM=607.10)	607.10	48 IN	EX. 6" PVC IN = 603.242 (N) EX. 6" PVC IN = 602.802 (E) EX. 6" PVC OUT = 602.802 (S)

STORM SEWER STRUCTURE TABLE

STRUCTURE NAME	PROP RIM ELEV	SUMP DEPTH	MH DIA.	INVERTS
EX. CBR 1 (EX. RIM=605.93)	605.93	0 FT	2 FT	EX. 8" PVC INV OUT = 604.44 (W)
EX. CBR 2 (EX. RIM=606.02)	606.02	0 FT	2 FT	EX. 8" PVC INV OUT = 604.61 (N)
PROP MH	606.03	2 FT	4 FT	EX 18" INV IN = 599.57 (S) PROP 18" INV OUT = 599.57 (N)

WATER LEVELS
- EL=603.40 MAX RECORDED (OCT, 1985)
- EL=603.10 ORDINARY HIGH WATER MARK (USACE)
- EL=602.60 ORDINARY HIGH WATER MARK (MDEQ)
- EL=602.17 AVG YEARLY HIGH (SEPTEMBER)
- EL=601.84 APRIL 2021
- EL=601.18 AVG YEARLY LOW (MARCH)
- EL=601.10 LOW WATER (CHART) DATUM
- EL=599.54 MIN. RECORDED (APRIL, 1926)

GRAPHIC SCALE
0 5 10 20
(IN FEET)
1 inch = 10 ft.

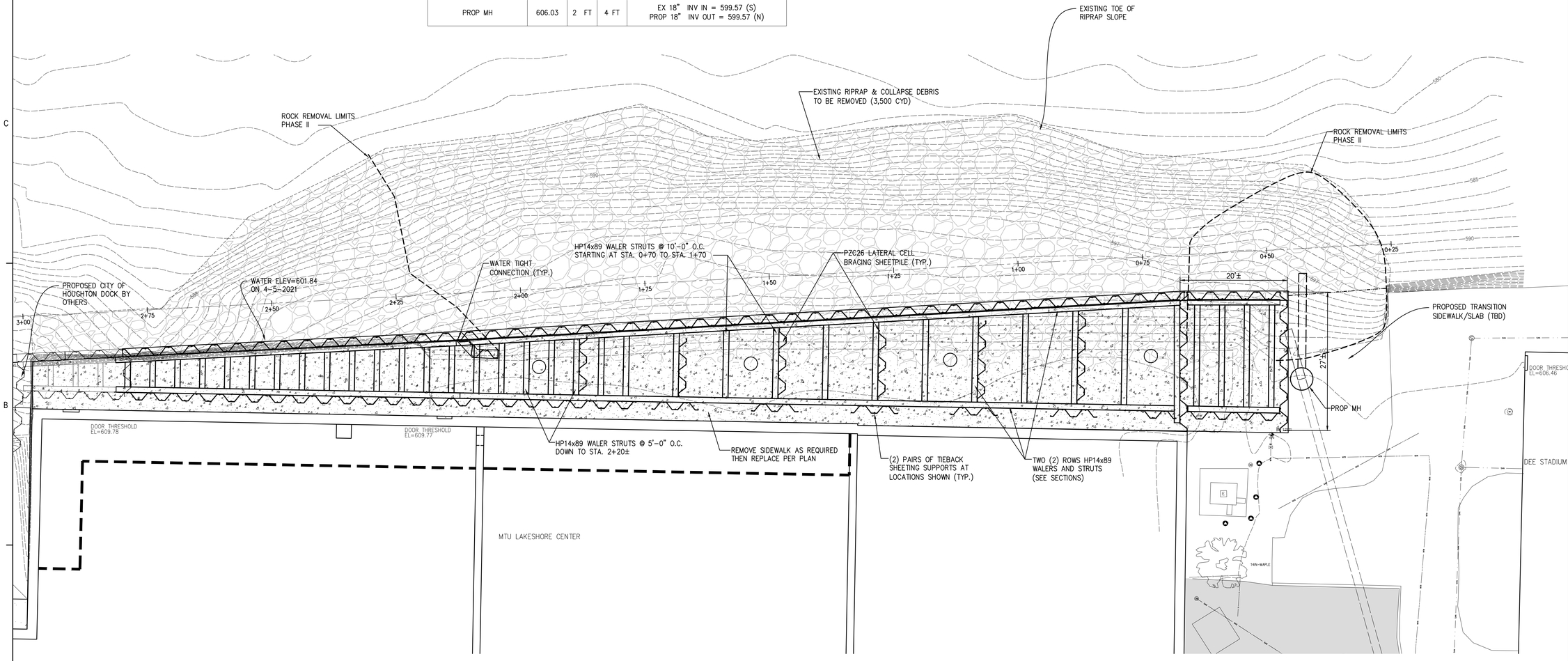

INFORMATION ONLY

UPEA ENGINEERS & ARCHITECTS
www.upea.com

MTU - LAKESHORE CENTER SEAWALL REPAIR/REPLACEMENT PLAN
MICHIGAN TECHNOLOGICAL UNIVERSITY
CITY OF HOUGHTON, MICHIGAN

ISSUED FOR:	DATE:
RECOMENDATION LETTER	09/27/21
PERMIT APPLICATION	06/16/22
REVISED PERMIT APPLICATION	08/18/22
REVISED PERMIT APPLICATION	10/26/22
BIDDING & CONSTRUCTION	11/04/22

MTU - LAKESHORE CENTER SEAWALL REPAIR/REPLACEMENT PLAN
MICHIGAN TECHNOLOGICAL UNIVERSITY
PROJECT NO: M40-01265

DESIGNED BY: G.A.K./M.P.H.
DRAWN BY: M.E.P./P.A.K.
CHECKED: G.A.K.
APPROVED: G.A.K.

FUTURE ADDITIONAL SHEETING PLAN

PHASE III

S901

11/10/2022 1:50 PM
P:\M40-01265 MTU\MTU - LAKESHORE CENTER SEAWALL REPAIR\SDWGS\M40-01265 BASE.DWG

© U.P. Engineers & Architects, Inc.

WATER LEVELS
- EL=603.40 MAX RECORDED (OCT, 1985)
- EL=603.10 ORDINARY HIGH WATER MARK (USACE)
- EL=602.60 ORDINARY HIGH WATER MARK (MDEQ)
- EL=602.17 AVG YEARLY HIGH (SEPTEMBER)
- EL=601.84 APRIL 2021
- EL=601.18 AVG YEARLY LOW (MARCH)
- EL=601.10 LOW WATER (CHART) DATUM
- EL=599.54 MIN. RECORDED (APRIL, 1926)

ROCK REMOVAL LIMITS PHASE II

EXISTING RIPRAP & COLLAPSE DEBRIS TO BE REMOVED (3,500 CYD)

WATER TIGHT CONNECTION (TYP.)

HP14x89 WALER STRUTS @ 10'-0" O.C. STARTING AT STA. 0+70 TO STA. 1+70

PZC26 LATERAL CELL BRACING SHEETPILE (TYP.)

PROP 24"ø DIA DRAINAGE MH RIM EL.=607.59

PROP 24"ø DIA DRAINAGE MH RIM EL.=606.70

WATER TIGHT CONNECTION (TYP.)

ROCK REMOVAL LIMITS PHASE II

20'±

PROPOSED TRANSITION SIDEWALK/SLAB (TBD)

27'±

PROP MH

DOOR THRESHOLD EL=609.77

HP14x89 WALER STRUTS @ 5'-0" O.C. DOWN TO STA. 2+20±

MTU LAKESHORE CENTER

PROP 24"ø DIA DRAINAGE MH RIM EL.=607.30

(2) PAIRS OF TIEBACK SHEETING SUPPORTS AT LOCATIONS SHOWN (TYP.)

TWO (2) ROWS HP14x89 WALERS AND STRUTS (SEE SECTIONS)

REMOVE SIDEWALK AS REQUIRED THEN REPLACE PER PLAN

PROP 24"ø DIA DRAINAGE MH RIM EL.=605.74

GRAPHIC SCALE
0 4 8 16
(IN FEET)
1 inch = 8 ft.

INFORMATION ONLY

UPEA ENGINEERS & ARCHITECTS
www.upea.com

MTU - LAKESHORE CENTER SEAWALL REPAIR/REPLACEMENT PLAN

MICHIGAN TECHNOLOGICAL UNIVERSITY

CITY OF HOUGHTON, MICHIGAN

ISSUED FOR:	DATE:
RECOMENDATION LETTER	09/27/21
PERMIT APPLICATION	06/16/22
REVISED PERMIT APPLICATION	08/18/22
REVISED PERMIT APPLICATION	10/07/22
BIDDING & CONSTRUCTION	11/04/22

MTU - LAKESHORE CENTER SEAWALL REPAIR/REPLACEMENT PLAN
MICHIGAN TECHNOLOGICAL UNIVERSITY

PROJECT NO: M40-01265

DESIGNED BY: G.A.K./M.P.H.
DRAWN BY: M.E.P./P.A.K.
CHECKED: G.A.K.
APPROVED: G.A.K.

FUTURE SHEETING ENLARGED PLAN

PHASE III

S902

© U.P. Engineers & Architects, Inc.

11/10/2022 1:00 PM P:\M40-01265 MTU\MTU - LAKESHORE CENTER SEAWALL REPAIR\DWGS\M40-01265 BASE.DWG

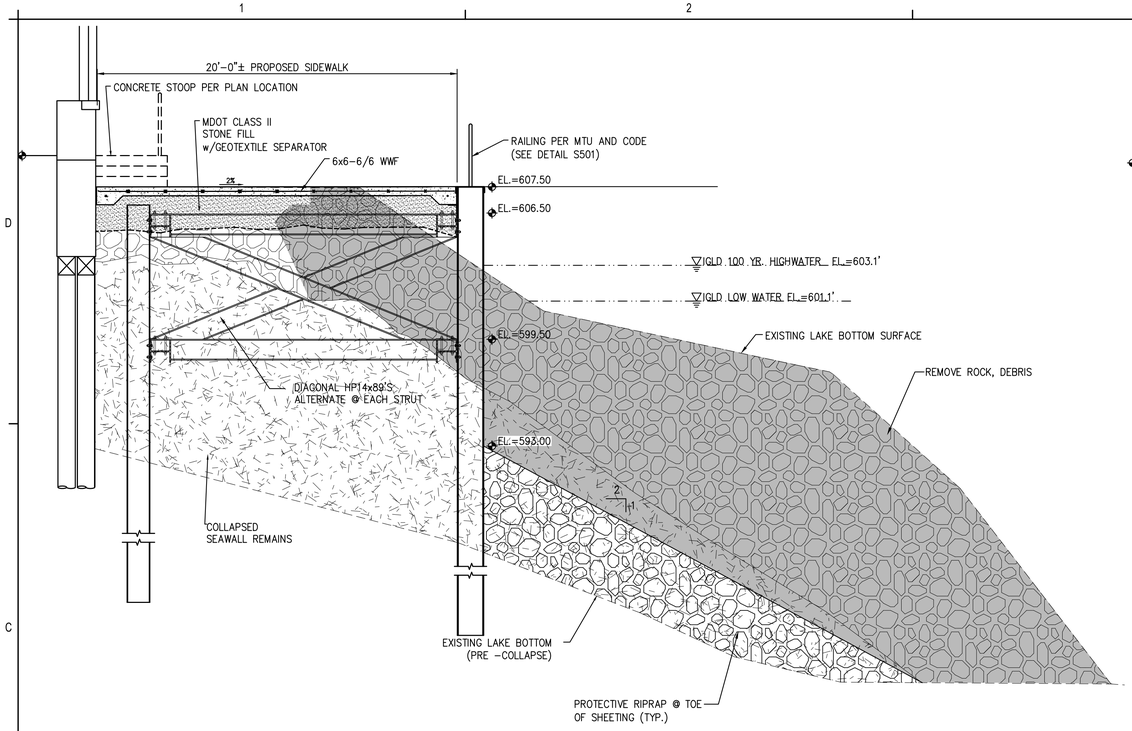

C2 SECTION @ STATION 1+50

SCALE: 1/4" = 1'-0"

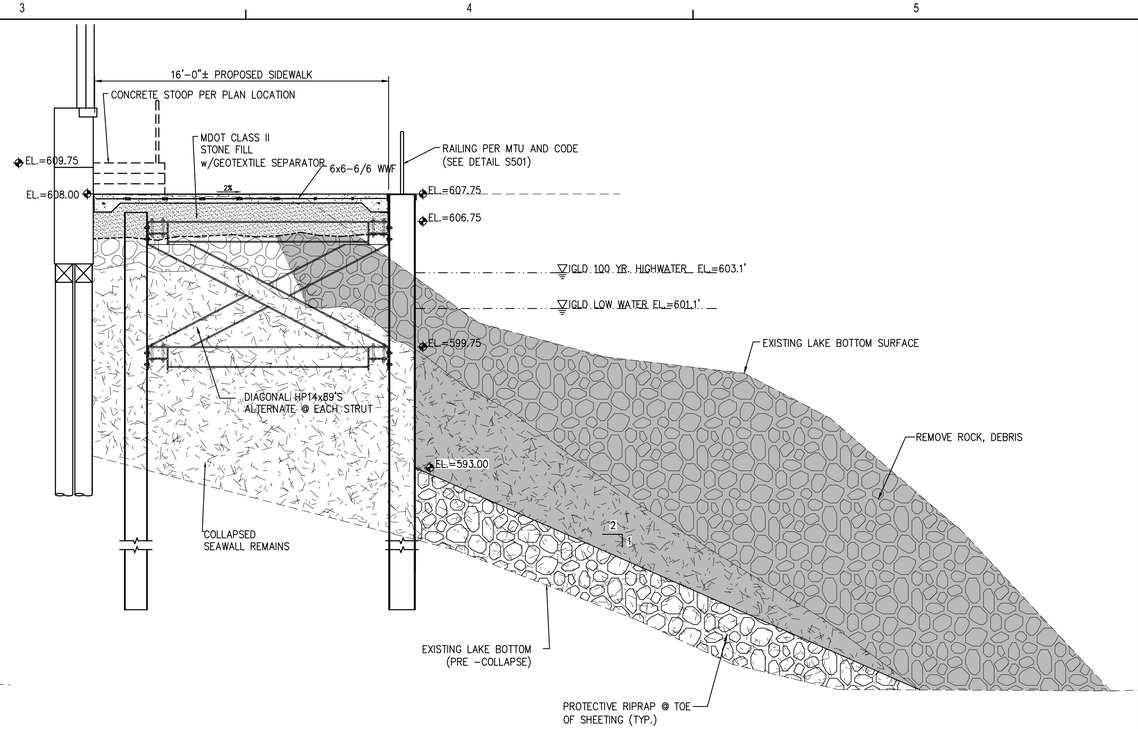

C4 SECTION @ STATION 2+00

SCALE: 1/4" = 1'-0"

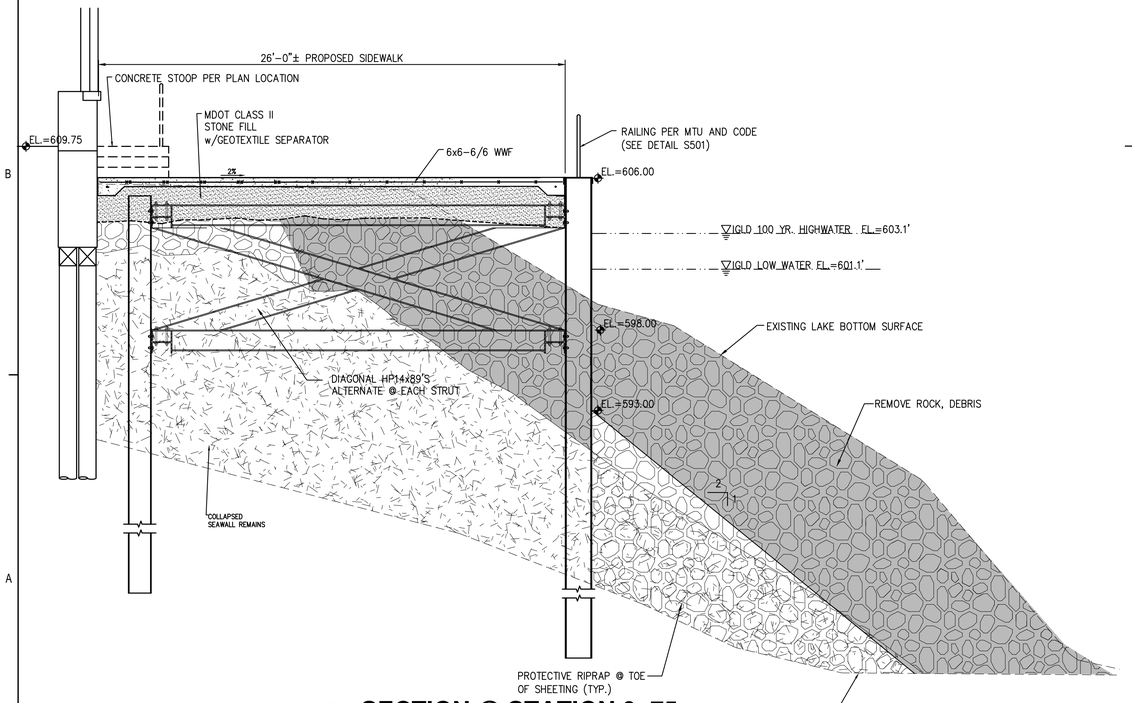

A2 SECTION @ STATION 0+75

SCALE: 1/4" = 1'-0"

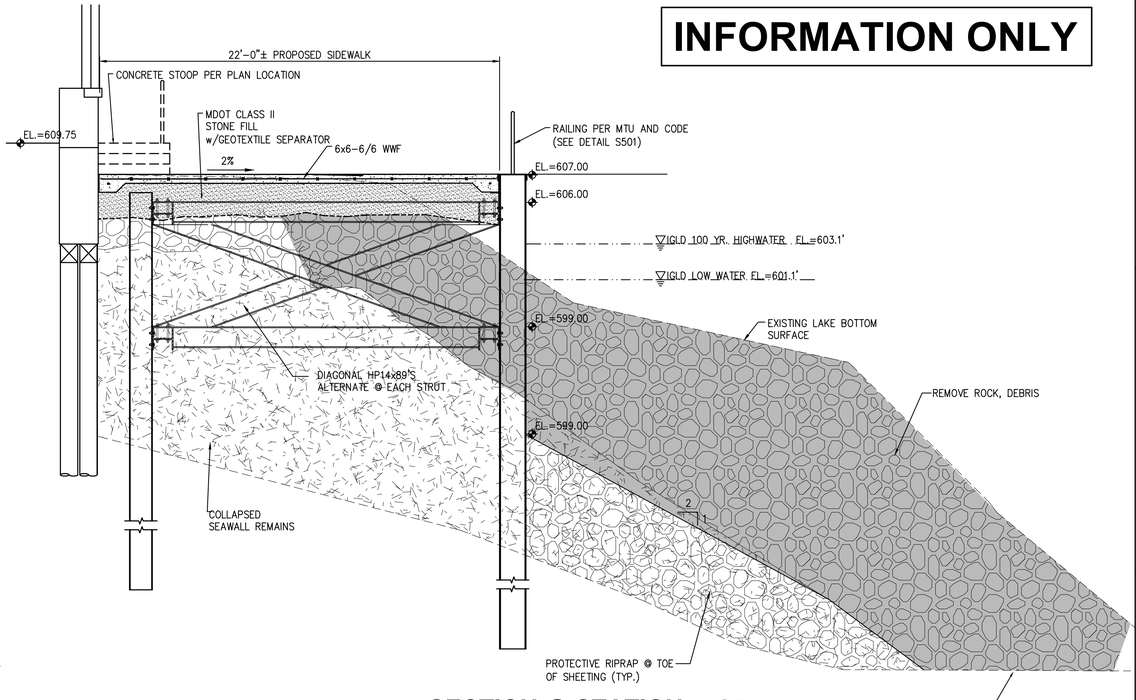

A4 SECTION @ STATION 1+25

SCALE: 1/4" = 1'-0"

INFORMATION ONLY

UPEA ENGINEERS & ARCHITECTS
www.upea.com

MTU - LAKESHORE CENTER SEAWALL
REPAIR/REPLACEMENT PLAN
MICHIGAN TECHNOLOGICAL UNIVERSITY
CITY OF HOUGHTON, MICHIGAN

ISSUED FOR:	DATE:
RECOMENDATION LETTER	09/27/21
PERMIT APPLICATION	06/16/22
REVISED PERMIT APPLICATION	08/18/22
REVISED PERMIT APPLICATION	10/07/22
BIDDING & CONSTRUCTION	11/04/22

MTU - LAKESHORE CENTER SEAWALL
REPAIR/REPLACEMENT PLAN
MICHIGAN TECHNOLOGICAL UNIVERSITY

PROJECT NO: M40-01265

DESIGNED BY: G.A.K./M.P.H.
DRAWN BY: M.E.P./P.A.K.
CHECKED: G.A.K.
APPROVED: G.A.K.

FUTURE PIER SECTIONS

PHASE III

S903

© U.P. Engineers & Architects, Inc.

11/10/2022 1:51 PM
P:\M40-01265 MTU-MTU - LAKESHORE CENTER SEAWALL REPAIR\SVWG\M40-01265 S0006.DWG