STANNARD TOWNSHIP

PLAN OF PROPOSED

SANITARY SEWER MANHOLE IMPROVEMENTS

ONTONAGON COUNTY, MICHIGAN

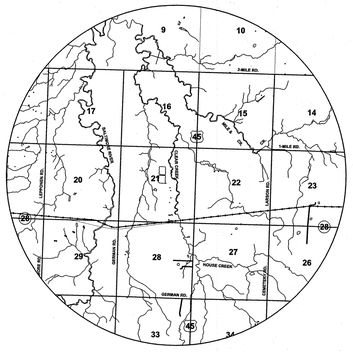

VICINITY MAP
SCALE: NONE

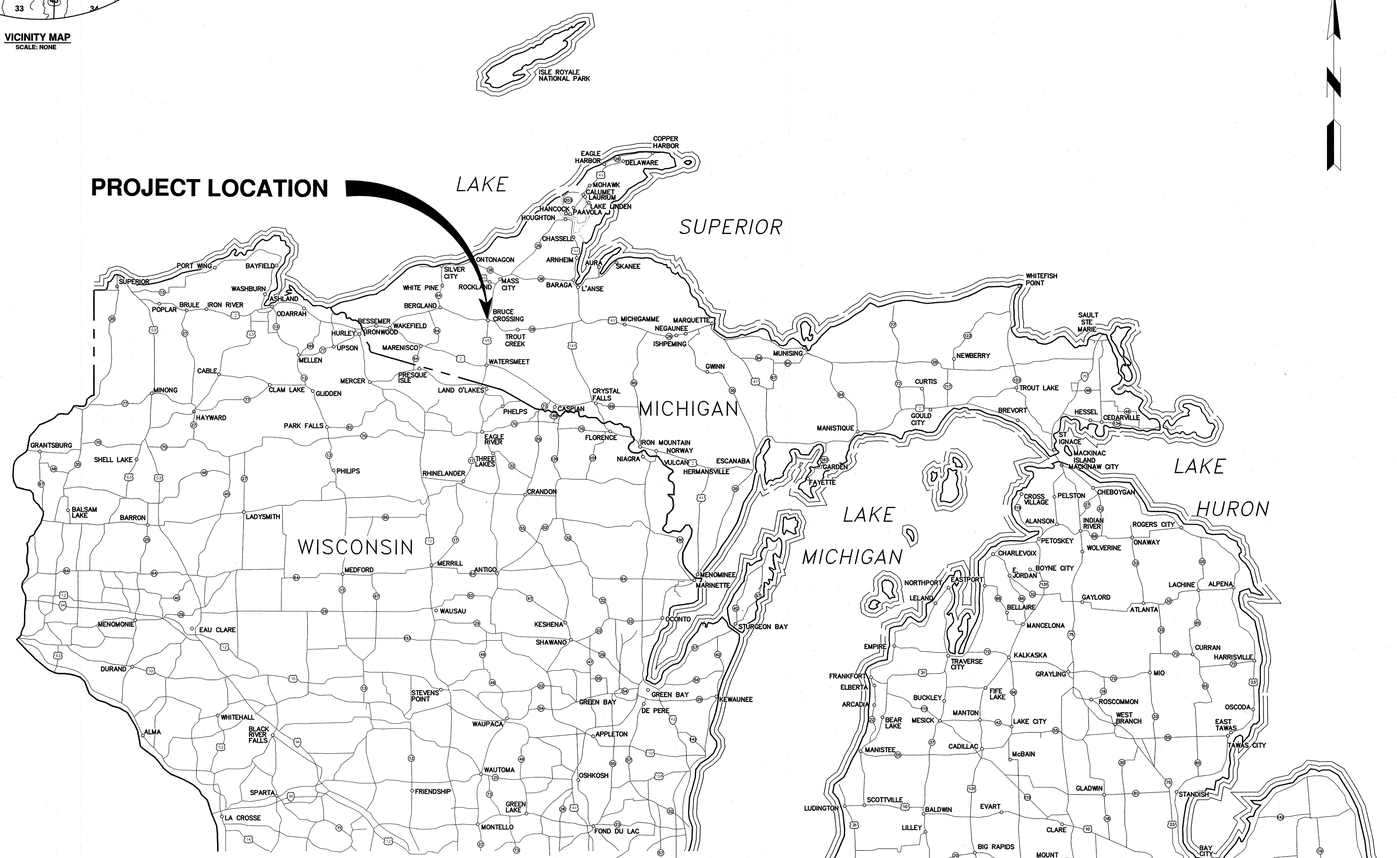

PROJECT COORDINATION:

UTILITY COORDINATION:

THE FOLLOWING UTILITIES ARE LOCATED IN OR NEAR THE RIGHT OF WAY OF THE PROPOSED PROJECT.

CATV:
CHARTER COMMUNICATIONS
115 EAST McLEOD AVENUE
IRONWOOD, MICHIGAN 49938
(906) 235-9623
CONTACT: JEFFERY GREGG

TELEPHONE:
AT&T
211 EAST B STREET
IRON MOUNTAIN, MICHIGAN 49801
(906) 779-2744
CONTACT: MARSHA BERTOLDI

ELECTRICITY:
UPPER PENINSULA POWER COMPANY
WEST HOUGHTON SERVICE CENTER
18494 HOUGHTON CANAL ROAD
HOUGHTON, MICHIGAN 49931
(906) 483-4561
CONTACT: ANDY IMBRUNNONE

ELECTRICITY:
ONTONAGON R.E.A.
500 J.K. PAUL STREET
ONTONAGON, MICHIGAN 49953
(906) 675-1308
CONTACT: MARK URBIS

WATER, SANITARY, & STORM SEWER
STANNARD TOWNSHIP
14927 M-28
BRUCE CROSSING, MICHIGAN 49912
(906) 827-3778
CONTACT: BILL ANDRUS

GAS:
SEMCO ENERGIES
34 EAST U.S. 41
NEGAUNEE, MI 49866
(906) 231-7972
CONTACT: JEFF JACKOVICH

ROAD COORDINATION:

ONTONAGON CO. RD. COMMISSION
415 SPAR STREET
ONTONAGON, MICHIGAN 49953
(906) 884-2332
CONTACT: MICHAEL MALONEY, P.E.

CONTRACTOR SHALL COORDINATE ALL OF THEIR WORK AND THE UTILITY COMPANIES' RELOCATION WORK AT NO ADDITIONAL COST TO THE PROJECT.

FOR PROTECTION OF UNDERGROUND UTILITIES AND IN CONFORMANCE WITH PUBLIC ACT 174, 2013, THE CONTRACTOR SHALL DIAL 811 A MINIMUM OF THREE FULL WORKING DAYS, EXCLUDING SATURDAYS, SUNDAYS AND HOLIDAYS PRIOR TO BEGINNING EACH EXCAVATION IN AREAS WHERE PUBLIC UTILITIES HAVE NOT BEEN PREVIOUSLY LOCATED. MEMBERS WILL THUS BE ROUTINELY NOTIFIED. THIS DOES NOT RELIEVE THE CONTRACTOR OF THE RESPONSIBILITY OF NOTIFYING UTILITY OWNERS WHO MAY NOT BE A PART OF THE "MISS DIG" ALERT SYSTEM.

STATE OF MICHIGAN
EMMETT RAY BJORN
LICENSE
No. 6201065007
LICENSED PROFESSIONAL ENGINEER
6/15/22

INDEX OF SHEETS

SHEET	DESCRIPTION
G001	COVER SHEET
C100	SANITARY SYSTEM MAP
C101	SITE PLAN
C501	NOTES AND DETAILS

UPEA ENGINEERS & ARCHITECTS
www.upea.com

SANITARY SEWER MANHOLE IMPROVEMENTS
STANNARD TOWNSHIP
ONTONAGON COUNTY, MICHIGAN

ISSUED FOR:	DATE:
OWNER REVIEW	5/25/2022
BIDDING	06/15/2022

SANITARY SEWER MANHOLE IMPROVEMENTS
STANNARD TOWNSHIP
PROJECT NO: S22-02258

DESIGNED BY: CWR
DRAWN BY: CWR
CHECKED: ERB
APPROVED: ERB

COVER

G001

Know what's below. Call before you dig.

UPEA ENGINEERS & ARCHITECTS

U.P. ENGINEERS & ARCHITECTS, INC.
ENGINEERING ARCHITECTURE PLANNING SURVEYING ENVIRONMENTAL

© U.P. Engineers & Architects, Inc.

6/15/2022 11:07 AM
W:\HOUGHTON\PROJECTS\S22-02258 STANNARD TWP MANHOLE AID CLEANOUT SURVEY\DWG\S22-02258 SANITARY SYSTEM.DWG

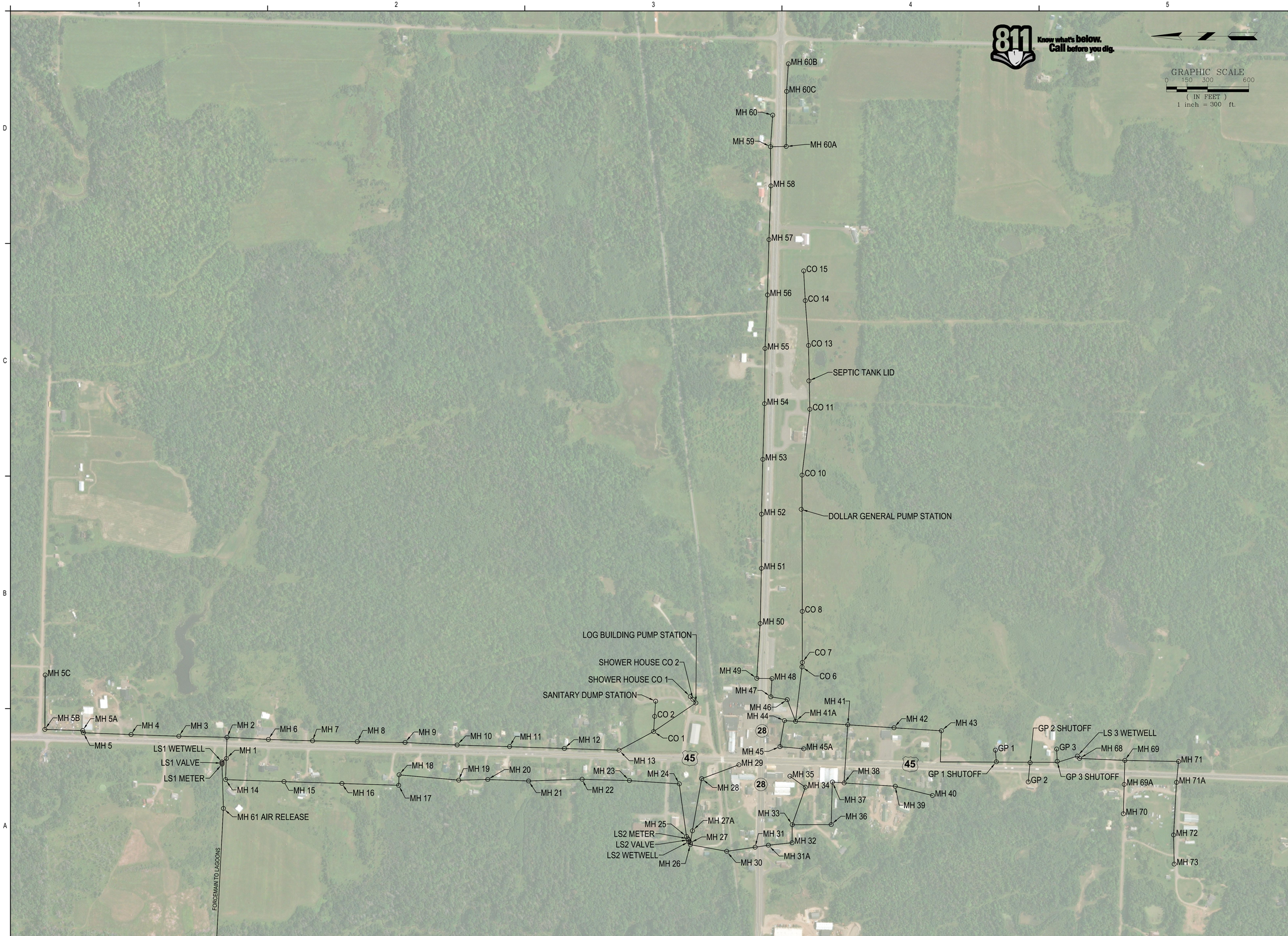

UPEA ENGINEERS & ARCHITECTS

www.upea.com

SANITARY SEWER MANHOLE IMPROVEMENTS

STANNARD TOWNSHIP

ONTONAGON COUNTY, MICHIGAN

ISSUED FOR:	DATE:
OWNER REVIEW	5/25/2022
BIDDING	06/14/2022

SANITARY SEWER MANHOLE IMPROVEMENTS STANNARD TOWNSHIP

PROJECT NO: S226-02258

DESIGNED BY: KTH
DRAWN BY: KTH
CHECKED: ERB
APPROVED: ERB

SANITARY SYSTEM MAP

C100

6/14/2022 10:37 AM
\\HOUGHTON\PROJECTS\S226-02258 STANNARD TWP-MANHOLE AND CLEANOUT SURVEY\DWGS\S226-02258 SANITARY SYSTEM.DWG

© U.P. Engineers & Architects, Inc.

SANITARY SEWER STRUCTURE TABLE	
STRUCTURE NAME	STRUCTURE DETAILS
MH35	48" DIA. RIM = 1142.44 8" PVC IN = 1133.49 (N) 6" PVC IN = 1136.14 (S) 6" PVC IN = 1136.19 (NE) 10" PVC OUT = 1133.29 (SW)

LEGEND:

- (A) MANHOLE REPLACEMENT
- (B) ADJUST FRAME AND COVER
- (C) ACRYLIC GROUTING (AVANTI AV-118)

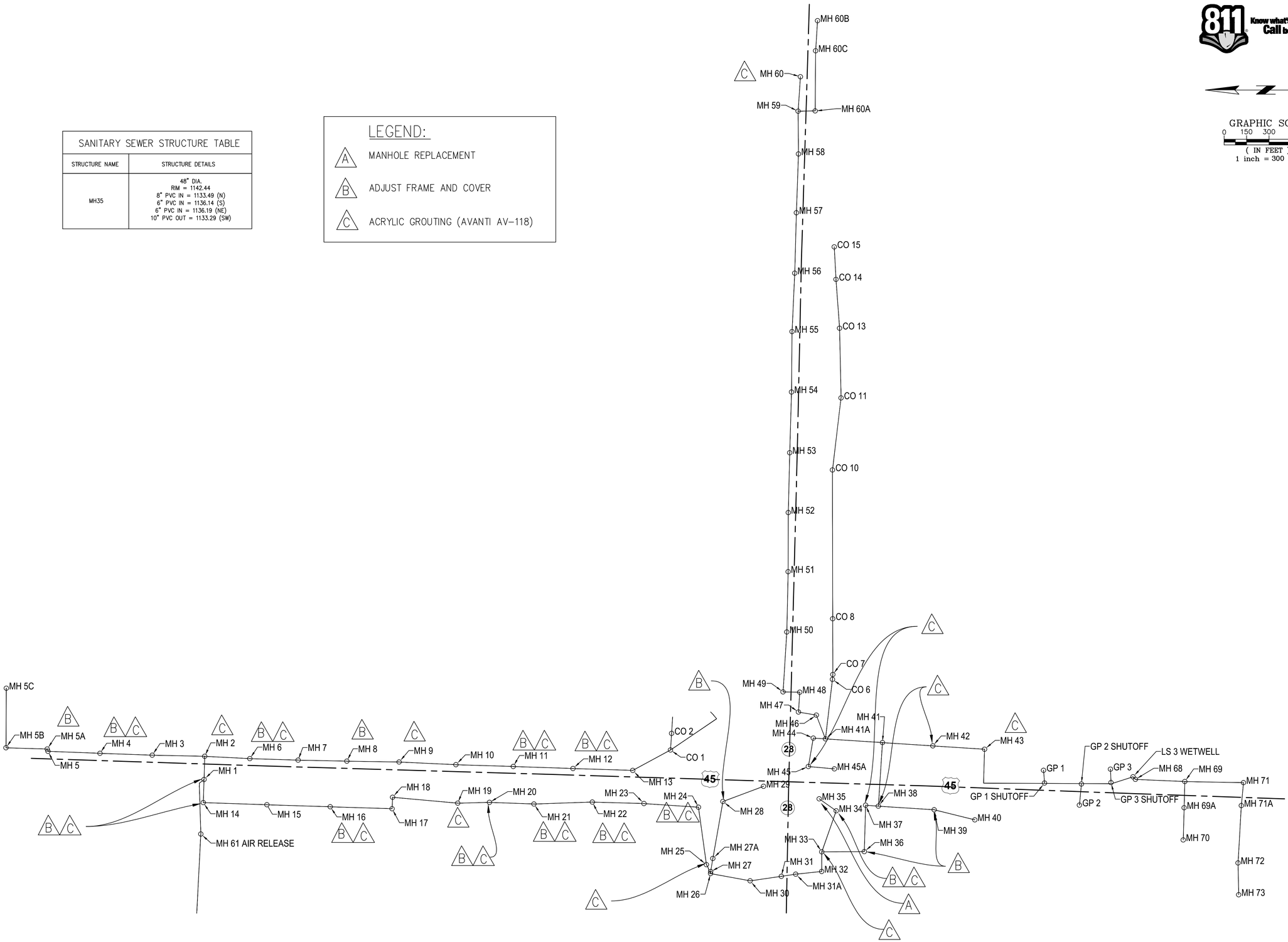

A4 SANITARY SEWER SYSTEM

SCALE: 1" = 300'

Know what's below. Call before you dig. 811

GRAPHIC SCALE
0 150 300 600
(IN FEET)
1 inch = 300 ft.

UPEA ENGINEERS & ARCHITECTS
www.upea.com

SANITARY SEWER MANHOLE IMPROVEMENTS

STANNARD TOWNSHIP

ONTONAGON COUNTY, MICHIGAN

ISSUED FOR:	DATE:
OWNER REVIEW	5/25/2022
BIDDING	06/15/2022

SANITARY SEWER
MANHOLE IMPROVEMENTS
STANNARD TOWNSHIP

PROJECT NO. S22-02258

DESIGNED BY: CWR
DRAWN BY: CWR
CHECKED: ERB
APPROVED: ERB

SITE PLAN

C101

© U.P. Engineers & Architects, Inc.

8/15/2022 11:01 AM
\\HOUGHTON\PROJECTS\S22\S-22258 STANNARD TWP- MANHOLE AND CLEANOUT SURVEY\DWGS\S22S-02258 SANITARY SYSTEM.DWG

GENERAL NOTES

1. ALL MATERIALS AND WORKMANSHIP REFERENCED TO MDOT SPECIFICATIONS SHALL BE IN ACCORDANCE WITH THE MICHIGAN DEPARTMENT OF TRANSPORTATION STANDARD SPECIFICATIONS FOR HIGHWAY CONSTRUCTION LATEST EDITION, AND THE SUPPLEMENTAL SPECIFICATIONS.

2. WHERE THE FOLLOWING ITEMS ARE CALLED FOR ON PLANS THEY ARE TO BE CONSTRUCTED ACCORDING TO THE MDOT STANDARD PLAN GIVEN BELOW OPPOSITE EACH ITEM UNLESS OTHERWISE INDICATED.

   SOIL EROSION AND SEDIMENTATION CONTROL MEASURES R-96-E
   TEMPORARY TRAFFIC CONTROL DEVICES WZD-125-E

3. TRAFFIC SHALL BE MAINTAINED IN ACCORDANCE WITH THE MICHIGAN MANUAL OF UNIFORM TRAFFIC CONTROL DEVICES. THE CONTRACTOR SHALL SUBMIT A TRAFFIC MAINTENANCE PLAN TO THE ENGINEER FOR APPROVAL, 10 DAYS PRIOR TO BEGINNING WORK.ALL TRAFFIC CONTROL MEASURES SHALL BE BY THE CONTRACTOR AND INCLUDED IN THE CONSTRUCTION OF THE PROJECT, AND SHALL NOT BE PAID FOR SEPARATELY.

4. QUANTITIES INDICATED ON THE PLAN SHEETS ARE APPROXIMATE AND FOR GENERAL INFORMATION ONLY.

5. ALL AREAS DISTURBED BY THE PROPOSED CONSTRUCTION SHALL BE RESTORED TO ORIGINAL CONDITION OR BETTER BY THE CONTRACTOR AS INCLUDED IN THE RESTORATION PAY ITEM, OR AS INCLUDED IN THE INDIVIDUAL WORK PAY ITEMS. RESTORATION WILL ONLY BE PAID FOR WITHIN PAY LIMITS AS SHOWN IN DETAILS ON SHEETS OF THESE PLANS. AREAS DISTURBED BY THE CONTRACTOR OUTSIDE THE PAY LIMITS SHALL BE RESTORED AT NO ADDITIONAL COST TO THE CONTRACT.

6. WHERE SHOWN ON THE CONSTRUCTION PLANS OR DESCRIBED IN THE SPECIFICATIONS AS TO BE "REMOVED", THE CONTRACTOR SHALL REMOVE AND DISPOSE OF AT THEIR EXPENSE, UNLESS NOTED OTHERWISE IN MEASUREMENT & PAYMENT SECTION 01_20_00

7. ALL PROPOSED SELF-LEVELING MANHOLE FRAME & COVERS IN PAVED AREAS SHALL BE SET PER MANUFACTURER RECOMMENDATIONS. ALL PROPOSED MANHOLE FRAMES & COVERS OUTSIDE OF PAVED AREAS SHALL BE SET 6 INCHES ABOVE THE GROUND SURFACE ELEVATION WITH GRADING TO DRAIN AWAY FROM THE MANHOLE OR AS DIRECTED BY THE ENGINEER

8. CONTRACTOR SHALL NOTIFY MISS DIG 811 PRIOR TO ANY EXCAVATION. THE LOCATION, SIZE AND ELEVATION OF EXISTING UTILITIES SHOWN ON THE PLANS WERE OBTAINED THROUGH FIELD OBSERVATIONS OR FROM EXISTING PLANS. THIS INFORMATION IS NOT GUARANTEED AND THE CONTRACTOR MUST DETERMINE FOR HIMSELF THE ACCURATE LOCATION OF ALL UTILITIES. LOCATION OF ADDITIONAL UTILITIES NOT SHOWN ON PLANS: THE CONTRACTOR SHALL VERIFY THE LOCATIONS OF ALL UNDERGROUND AND OVERHEAD UTILITIES AT THE PROJECT SITE AND SHALL MAKE ALLOWANCES FOR WORKING AROUND ALL SUCH UTILITIES (WATER, SANITARY & STORM SEWER, GAS, ELECTRIC, TELEPHONE, CABLE TV, ETC.) AND SHALL BE INCLUDED IN THE COST OF THE CONSTRUCTION OF THE PROJECT AND SHALL NOT BE PAID FOR SEPARATELY. CONTRACTOR SHALL COORDINATE ALL OF THEIR WORK AND THE UTILITY COMPANIES RELOCATION WORK AT NO ADDITIONAL COST TO THE PROJECT.

9. CONTRACTOR SHALL COORDINATE ALL OF HIS WORK WITH ANY UTILITY COMPANY SERVING THE AREA IN WHICH THIS CONSTRUCTION IS TAKING PLACE. CONTRACTOR SHALL COORDINATE ALL OF THEIR WORK AND THE UTILITY COMPANIES' RELOCATION WORK AT NO ADDITIONAL COST TO THE PROJECT.

10. ALL SURVEYING MONUMENTS AND PROPERTY CORNERS DISTURBED DURING CONSTRUCTION SHALL BE REPLACED BY A LICENSED LAND SURVEYOR, INCIDENTAL TO THE PROJECT.

11. THE CONDITIONS OF ALL PERMITS (EGLE, MDOT, ONTONAGON CO. RD. COMM., ACT 451 EROSION CONTROL, ETC.) SHALL BE STRICTLY ADHERED TO. THE CONTRACTOR SHALL FULLY INFORM THEMSELVES OF ALL PERMIT REQUIREMENTS PRIOR TO BIDDING AND CONSTRUCTING THE WORK.

12. ANY INFORMATION PROVIDED ON THE PLANS REGARDING SUB-SURFACE SOIL CONDITIONS IS PROVIDED FOR THE GENERAL INFORMATION OF THE BIDDING CONTRACTOR AND IS NOT INTENDED TO MAKE REPRESENTATION OF THE TYPE OR ELEVATION OF ANY SUBSURFACE CONDITION. THE CONTRACTOR SHALL STILL HAVE THE RESPONSIBILITY TO VISIT THE SITE AND BASE THEIR BID ON THEIR OWN PERSONAL OBSERVATIONS AND INVESTIGATIONS. SOILS REPORT AVAILABLE UPON REQUEST.

13. THE CONTRACTOR SHALL NOT STORE OR STAGE MATERIALS OR EQUIPMENT WITHIN ANY ROAD R.O.W. UNLESS NOTED OR APPROVED BY THE OWNER AND ENGINEER.

14. ALL STREET PAVEMENT AND BASE REPLACEMENT SHALL MEET THE ONTONAGON COUNTY ROAD COMMISSION CURRENT STANDARDS (OR MDOT IF APPLICABLE). REFER TO DETAILS. PRIOR TO WINTER CONDITIONS, ROADWAYS UNDER CONSTRUCTION SHALL BE RESTORED TO A CONDITION ACCEPTABLE TO THE ONTONAGON COUNTY ROAD COMMISSION (OR MDOT IF APPLICABLE). PROPER GRADING AND COMPACTION TO ALLOW WINTER SNOW PLOWING AND TRAFFIC WILL BE REQUIRED. PAVEMENT REPLACEMENT SHOULD NOT BE NECESSARY TO COMPLETE THE PROJECT. PAYMENT FOR PAVEMENT REPLACEMENT SHALL BE INCIDENTAL TO THE CONTRACT.

15. ALL EXISTING SEWERS SHALL BE KEPT IN OPERATION THROUGHOUT THE PROJECT. ALL EXISTING SEWERS WHICH BECOME BROKEN IN THE COURSE OF THE SEWER WORK SHALL BE REPAIRED WITH FERNCO STRONGBACK RC SERIES TYPE COUPLINGS AND PVC. PIPE REPAIRS TO EXISTING SEWERS SHALL BE MADE BY THE CONTRACTOR AT NO COST TO THE OWNER, AND SHALL BE CONSIDERED INCIDENTAL TO SEWER CONSTRUCTION. THE SIZE OF REPAIR MATERIALS SHALL MATCH THE DAMAGED SEWER.

16. EXISTING UTILITY LOCATIONS SHOWN ON THESE PLANS ARE BASED ON THE BEST AVAILABLE INFORMATION. HOWEVER, IT MAY BE DISCOVERED THAT THE ACTUAL LOCATIONS OF SOME MAINS MAY DIFFER FROM THAT SHOWN. THE CONTRACTOR IS ADVISED TO CONTACT MISS DIG FOR UTILITY LOCATIONS AND EXCAVATE WITH CAUTION. ONTONAGON COUNTY OPERATIONS PERSONNEL WILL ENDEAVOR TO PROVIDE ACCURATE SEWER LOCATIONS WHERE POSSIBLE.

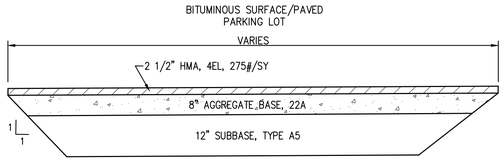

A1 TYPICAL PARKING LOT RESTORATION DETAIL
NOT TO SCALE

811 Know what's below. Call before you dig.

KEYNOTE SCHEDULE (DETAIL A5)

NUMBER	DESCRIPTION
1	WATERTIGHT CAST IRON FRAME AND LID w/ SELF SEALING LID (RUBBER GASKET AT MACHINED GROOVE) AND CONCEALED PICK HOLE MARKED "SEWER". MINIMUM WEIGHT 380lbs. (EJ #1048 FRAME AND 10400 AGS COVER, OR EQUAL) DEPRESS MANHOLE RIMS ¾" IN PAVED AREAS. MANHOLE FRAME SHALL BE EJ SELF-LEVEL FRAME, OR EQUAL, IN PAVED AREAS. SEE MANHOLE NOTES.
2	MANHOLE STEPS 16" O.C. M.A. INDUSTRIES PS 1 NEENAH FOUNDRY No. R-1982-F OR EQUAL.
3	PROVIDE 10" BITUMASTIC LAP AT ALL JOINTS – CADILLOC WRAP
4	RUBBER BOOT WATERTIGHT SEAL
5	3" MINIMUM ADJUSTING RINGS
6	ECCENTRIC CONE
7	REINFORCED PRECAST MANHOLE SECTIONS
8	ASTM D-449-79 TYPE II BITUMINOUS COATING
9	DOUBLE RIBBED RUBBER GASKETS OR Rub'R Nek
10	8" BASE POURED MONOLITHIC w/ BOTTOM SECTION
11	BEDDING MATERIAL – 12" MINIMUM
12	SEWER MAIN
13	CHIMNEY SEALS TO BE EXTERNAL RUBBER SEALS WITH STAINLESS STEEL TOP & BOTTOM BANDS WHERE REQUIRED, IN WET AREAS, BY THE ENGINEER.(INCIDENTAL TO MANHOLES)
14	GREEN CARSONITE MARKER SLATS SHALL BE PLACED AT ALL MANHOLES OFF THE "TRAVELED WAY" AS SPECIFIED BY THE ENGINEER. (INCIDENTAL TO COST OF MH)
15	CONCRETE BENCH

MANHOLE NOTES:
1. ALL MANHOLES SHALL COMPLY WITH SPECIFICATION SECTION 33 05 13.
2. ALL MANHOLES IN PAVEMENT AREAS SHALL BE EQUIPPED WITH SELF ADJUSTING RINGS/CASTINGS AND EJ INFRA-RISER, OR EQUAL.
3. SHAPE BOTTOM TO SMOOTH, SEMI-CIRCULAR CHANNELS. ALL TURNS IN MANHOLE FLOW CHANNELS SHALL HAVE SWEEPING BENDS TO PREVENT ACCUMULATION OF DEBRIS (NO SHARP BENDS).
4. THE SPACE BETWEEN THE PIPE AND THE MANHOLE WALL, ADJACENT TO THE RUBBER BOOT AT THE MANHOLE CONNECTION, SHALL BE ENTIRELY FILLED WITH A 1:2 CEMENT MORTAR, AND BROOMED/TROWELED TO A SMOOTH, NEAT FINISH.
5. INLET PIPES SHALL SIT ON PRECAST FLOWLINES WITHIN MANHOLE. OUTLET PIPES TO BE SET OFF BENCH WITH SMOOTH MORTAR FLOWLINE TRANSITION BETWEEN BENCH AND PIPE.
6. MORTAR ALL INSIDE MANHOLE JOINTS TO A SMOOTH, NEAT FINISH.
7. HORIZONTAL ALIGNMENT OF MANHOLE STEPS SHALL BE <1" OF CENTER OF STEPS.

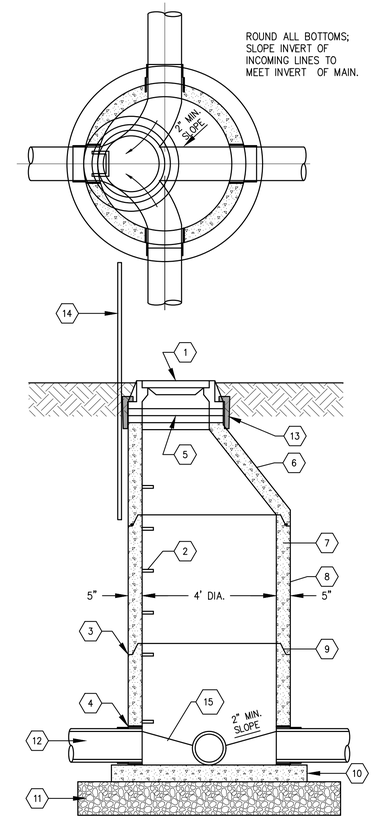

A5 STANDARD MANHOLE DETAIL
NOT TO SCALE

UPEA ENGINEERS & ARCHITECTS
www.upea.com

SANITARY SEWER MANHOLE IMPROVEMENTS
STANNARD TOWNSHIP
ONTONAGON COUNTY, MICHIGAN

ISSUED FOR:	DATE:
OWNER REVIEW	5/25/2022
BIDDING	06/15/2022

SANITARY SEWER MANHOLE IMPROVEMENTS
STANNARD TOWNSHIP

PROJECT NO: S22-02258
DESIGNED BY: CWR
DRAWN BY: CWR
CHECKED: ERB
APPROVED: ERB

NOTES & DETAILS

C501

6/14/2022 10:34 AM
P:\S22\S-02258 STANNARD TWP-MANHOLE AND CLEANOUT SURVEY\DWGS\S22S-02258 SANITARY SYSTEM.DWG

© U.P. Engineers & Architects, Inc.