CITY OF HANCOCK- STORM SEWER REPAIRS PHASE 2

Hancock, MI

PROJECT NO. 7030-18-0030
FEMA PROJECT #64226
FEMA PW#157

DATE: March 15, 2021

Architects, Engineers & Planners:

424 Hancock Street
Hancock, MI 49930

906.482.0535
906.482.6453 FAX

www.ohm-advisors.com

Michael Markham, PE
906.482.0535
Project Manager
michael.markham@ohm-advisors.com

Ericka Malone, PE
906.482.0535
Project Engineer
ericka.malone@ohm-advisors.com

TABLE OF CONTENTS

BIDDING DOCUMENTS — Page

- Advertisement for Bids 11
- Instructions to Bidders 13
- DBA Requirements 27
- DBE Form 29
- DBE Frequently Asked Questions 31
- Qualification Statement 33
- Bid Form 45
- Bid Bond 53
- Certification Regarding Lobbying 57

CONTRACT DOCUMENTS

- Notice of Award 61
- Agreement Between Owner and Contractor for Construction Contract (Stipulated Price) 63
- Performance Bonds 73
- Payment Bonds 77
- Notice to Proceed 81
- Standard General Conditions 83
- Contractor's Application for Payment 155
- Change Order 157

CLOSEOUT DOCUMENTS

- Final Completion Checklist 161
- Certificate of Substantial Completion 163
- Guaranty 165
- Sworn Statement 167
- Full Unconditional Waiver of Lien 169

NOTICE TO BIDDERS

- Maintaining Traffic 173
- Utility Coordination 177

SPECIAL PROVISIONS

- 12SP-104B-03 High Visibility Clothing 181
- 12SP-105B-01 Temporary Traffic Control Materials 183
- 12SP-208C-04 Erosion Control, Inlet Protection, Fabric Drop 185
- 12SP-401B-02 Wrapping Culvert and Storm Sewer Joints 187
- 12SP-401C-01 Culvert and Sewer Bedding and Backfill 189
- 12SP-501A-01 Sampling Asphalt Binder on Local Agency Projects 191
- 12SP-501AA-02 Warm-Mix Asphalt Permissive Use for Local Agency Projects 193
- 12SP-501E-04 Recycled Hot Mix Asphalt Mixture on Local Agency Projects 195

- 12SP-501J-05 Acceptance of Hot Mix Asphalt Mixture on Local Agency Projects 197
- 12SP-604A-10 Quality Control and Acceptance of Portland Cement Concrete 205
- 12SP-802A-02 Concrete Curb, and Gutter, With Basalt Fiber Reinforced Polymer, Detail 227
- 12SP-803B-01 Curb Ramp Opening, Concrete 231
- 12SP-803 Special Provision for Railing for Steps 233
- 12SP-811Q-05 Permanent Pavement Markings 235
- 12SP-812AA-01 Fluorescent Plastic Drum 239
- 12SP-812C-01 Traffic Control Quality and Compliance 241
- 12SP-812F-02 Payment for Minor Traffic Devices and Traffic Regulator Control 243
- 12SP-812G-03 Sign, Type B, Temporary, Prismatic, Special 245
- 12SP-812L-01 Supports for Temporary Signs 247
- 12SP-812N-01 Measurement and Payment of Temporary Traffic Control Devices 249
- 12SP-812U-01 Type III Barricades 251
- 12SP-812X-01 Payment of Temporary Traffic Control Devices 253
- 12SP-813 Special Provision for Existing Riprap, Remove & Salvage 255
- 12RC-816(A265) Slope Restoration, Non-Freeway 257
- 12SP-900A-01 Industrial By-Products and Beneficial Re-Use 261
- 12SP-901 Special Provision for Non-Structural Flowable Fill 263
- 12SP-902C-02 Crushed Concrete Near Water 265
- 12SP-902D-01 Alternative Granular Materials for Fill and Subbase 267
- 12SP-902E-04 Superpave Final Aggregate Blend Requirements 269
- 12SP-905A-02 Steel Reinforcement Revisions 271
- 12SP-906B-01 Structural Steel Revisions 273
- 12SP-907A-02 Recycled Rubber or Plastic Products 275
- 12SP-908A-02 Miscellaneous Metal Product Revisions 277
- 12SP-910A-01 Physical Requirements for Geotextiles 279
- 12SP-911A-02 Water 281
- 12SP-920A-06 Permanent Pavement Marking Materials 283
- 12SS-001A-19 Errata to the 2012 Standard Specifications 287

PERMITS

- Houghton County Soil Erosion and Sedimentation Control Permit #21-271-SE 319
- MDOT Right-of-Way Use Permit #31052-075541-21-031021 325

DRAWINGS – BOUND SEPARATELY

- Cover Storm Sewer Repairs Phase II
- C-001 Notes Sheet
- C-002 Legend Sheet
- C-003 Site Locations
- C-004 Traffic Control
- C-110 Site 57 - Dakota Street – Existing Conditions

- C-111 Site 57 - Dakota Street – Proposed
- C-120 Site 107 - Forest Street – Existing Conditions
- C-121 Site 107 – Forest Street - Proposed
- C-122 Site 107 – Dunstan Street – Existing Conditions
- C-123 Site 107 – Dunstan Street - Proposed
- C-124 Site 107 – Tezcuco Street – Existing Conditions
- C-125 Site 107 – Tezcuco Street – Proposed
- C-500 Site 107 – Tezcuco Street – Alternate 1 Details

BIDDING DOCUMENTS

CITY OF HANCOCK
HANCOCK, MI
HANCOCK SEWER REPAIRS PHASE II (FEMA PROJECT #64226)

ADVERTISEMENT FOR BIDS

Sealed Bids for the construction of the **Hancock Sewer Repairs Phase II** will be received, by the **City of Hancock**, at the office of the **City of Hancock, 399 Quincy Street, Hancock, Michigan 49930**, until **2:00 p.m.** local time on **Monday April 12, 2021**, at which time the Bids received will be opened and read via conference call. To attend the bid opening via conference call 1-312-626-6799 password 409090.

Bids should be mailed to the City Office whose address is above. The bid shall be enclosed in a separate mailing envelope with the notation "SEALED BID ENCLOSED" and the bid shall be in a sealed envelope which indicates the Project Name and Bidder Name.

Bids may also be hand delivered to the City Office prior to the bid opening by appointment only. Contact Mary Babcock at (906) 482-1121 to schedule a bid drop off. The same reference to bid packages as indicated above also applies to bids being hand delivered.

Prior to the time and date designated for receipt of Bids, any Bid that has been submitted may be modified or withdrawn via email to manager@cityofhancock.net or facsimile at (906) 482-7910. Such notice shall be in writing over the signature of the Bidder. Written confirmation over the signature of the Bidder shall be received, and date – and time-stamped by the receiving party on or before the date and time set for receipt of Bids. A change shall be so worded as not to reveal the amount of the original Bid.

The Project consists of storm sewer replacement at four locations within the City of Hancock. Project includes the removal and replacement of existing storm sewer pipes, removal and installation of pre-cast concrete storm structures, HMA paving, concrete curb and gutter, rip rap, temporary sheet piling, and associated restoration.

Bids will be received for a single prime Contract. Bids shall be on a unit price basis, with additive alternate bid items as indicated in the Bid Form.

The Issuing Office for the Bidding Documents is: **OHM Advisors, 424 Hancock Street, Hancock, Michigan 49930, Michael Markham, PE, telephone number 906-482-0535**. Prospective Bidders may obtain copies of the Bidding Documents from the Issuing Office as described below.

Bidding Documents also may be examined at the **Marquette Builders Exchange, 1229 W. Washington Street, Marquette, Michigan 49855,** online at **QuestCND.com**; the office of the **City of Hancock, 399 Quincy Street, Hancock, Michigan 49930**, on Mondays through Fridays between the hours of **8:00 a.m. and 5:00 p.m. with prior appointment** and the office of the Engineer, **OHM Advisors, 424 Hancock Street, Hancock, Michigan 49930**, on Mondays through Fridays between the hours of **8:00 a.m. and 5:00 p.m. upon prior appointment**.

Printed copies of the Bidding Documents may be obtained from the Issuing Office, upon prior appointment, upon payment of a non-refundable fee of $50.00 for each set. Checks for Bidding Documents shall be payable to "**OHM Advisors**". Upon request and receipt of the non-refundable fee indicated above, the Issuing Office will transmit the Bidding Documents via delivery service. Partial sets of Bidding Documents will not be available from the Issuing Office. Neither Owner nor Engineer will be responsible for full or partial sets of Bidding Documents, including Addenda if any, obtained from sources other than the Issuing Office.

Bidding Documents may be viewed and downloaded at www.questcdn.com. You may register for a free membership with QuestCDN and download the digital plan documents for $15.00 by inputting Quest project #7530516 or the OHM Advisors project #7030-18-0030 on the website's Project Search page. Please contact QuestCDN.com at 952-233-1632 or info@questcdn.com for assistance in free membership registration, downloading, and working with this digital project information.

EJCDC® C-111, Suggested Advertisement for Bids for Construction Contracts.
Copyright © 2013 National Society of Professional Engineers, American Council of Engineering Companies, and American Society of Civil Engineers. All rights reserved.

Bid security shall be furnished in accordance with the Instructions to Bidders.

The **City of Hancock** is receiving federal funds for this project through the FEMA Public Assistance Grant Funds program. The **City of Hancock** is required to following the standards indicated in Title 2 of the Code of Federal Regulations ("CFR"), sections 200.318 through 200.326.

Owner: **City of Hancock**

By: **Mary Babcock**

Title: **City Manager**

Date: March 15, 2021

EJCDC® C-111, Suggested Advertisement for Bids for Construction Contracts.
Copyright © 2013 National Society of Professional Engineers, American Council of Engineering Companies, and American Society of Civil Engineers. All rights reserved.

INSTRUCTIONS TO BIDDERS

TABLE OF CONTENTS

Page

Article 1 – Defined Terms……15

Article 2 – Copies of Bidding Documents……15

Article 3 – Qualifications of Bidders……15

Article 4 – Site and Other Areas; Existing Site Conditions; Examination of Site; Owner's Safety Program; Other Work at the Site……15

Article 5 – Bidder's Representations……13

~~Article 6 - Pre-Bid Conference~~……18

Article 7 - Interpretations and Addenda……18

Article 8 - Bid Security……18

Article 9 - Contract Times……19

Article 10 – Liquidated Damages……19

Article 11 – Substitute and "Or-Equal" Items……19

Article 12 – Subcontractors, Suppliers, and Others……19

Article 13 – Preparation of Bid……20

Article 14 – Basis of Bid……20

Article 15 – Submittal of Bid……21

Article 16 – Modification and Withdrawal of Bid……21

Article 17 – Opening of Bids……21

Article 18 – Bids to Remain Subject to Acceptance……21

Article 19 – Evaluation of Bids and Award of Contract……22

Article 20 – Bonds and Insurance……22

Article 21 – Termination For Cause and Convenience……22

Article 22 – Equal Employment Opportunity……22

Article 23 – Contract Work Hours and Safety Standards Act……23

Article 24 – Suspension and Debarment……24

Article 25 – Byrd Anti-Lobbying Amendment……24

Article 26 – Procurment of Recovered Materials……25

Article 27 – Access to Records……25

EJCDC® C-200, Suggested Instructions to Bidders for Construction Contracts.
Copyright © 2013 National Society of Professional Engineers, American Council of Engineering Companies, and American Society of Civil Engineers. All rights reserved.

Article 28 – DHS Seal, Logo and Flags 25
Article 29 – Compliance with Federal Law, Regulations, and Executive Order 25
Article 30 – No Obligation by Federal Government..... 25
Article 31 – Program Fraud and False or Fraudulant Statements or Related Acts 26

Copyright © 2013 National Society of Professional Engineers, American Council of Engineering Companies, and American Society of Civil Engineers. All rights reserved.

ARTICLE 1 – DEFINED TERMS

1.01 Terms used in these Instructions to Bidders have the meanings indicated in the General Conditions and Supplementary Conditions. Additional terms used in these Instructions to Bidders have the meanings indicated below:

A. *Issuing Office* – The office from which the Bidding Documents are to be issued.

ARTICLE 2 – COPIES OF BIDDING DOCUMENTS

2.01 Complete sets of the Bidding Documents may be obtained from the Issuing Office in the number and format stated in the advertisement for bid.

2.02 Complete sets of Bidding Documents shall be used in preparing Bids; neither Owner nor Engineer assumes any responsibility for errors or misinterpretations resulting from the use of incomplete sets of Bidding Documents.

2.03 Owner and Engineer, in making copies of Bidding Documents available on the above terms, do so only for the purpose of obtaining Bids for the Work and do not authorize or confer a license for any other use.

ARTICLE 3 – QUALIFICATIONS OF BIDDERS

3.01 To demonstrate Bidder's qualifications to perform the Work, after submitting its Bid and within **10** days of Owner's request, Bidder shall submit (a) written evidence establishing its qualifications such as financial data, previous experience, and present commitments, and (b) the following additional information:

A. Evidence of Bidder's authority to do business in the state where the Project is located.

B. Bidder's state or other contractor license number, if applicable.

C. Subcontractor and Supplier qualification information; coordinate with provisions of Article 12 of these Instructions, "Subcontractors, Suppliers, and Others."

D. Other required information regarding qualifications.

3.02 A Bidder's failure to submit required qualification information within the times indicated may disqualify Bidder from receiving an award of the Contract.

3.03 No requirement in this Article 3 to submit information will prejudice the right of Owner to seek additional pertinent information regarding Bidder's qualifications.

3.04 Bidder is advised to carefully review those portions of the Bid Form requiring Bidder's representations and certifications.

ARTICLE 4 – SITE AND OTHER AREAS; EXISTING SITE CONDITIONS; EXAMINATION OF SITE; OWNER'S SAFETY PROGRAM; OTHER WORK AT THE SITE

4.01 *Site and Other Areas*

A. The Site is identified in the Bidding Documents. By definition, the Site includes rights-of-way, easements, and other lands furnished by Owner for the use of the Contractor. Any additional lands required for temporary construction facilities, construction equipment, or storage of materials and equipment, and any access needed for such additional lands, are to be obtained and paid for by Contractor.

Copyright © 2013 National Society of Professional Engineers, American Council of Engineering Companies, and American Society of Civil Engineers. All rights reserved.

4.02 *Existing Site Conditions*

A. Subsurface and Physical Conditions; Hazardous Environmental Conditions

1. The Supplementary Conditions identify:

a. those reports known to Owner of explorations and tests of subsurface conditions at or adjacent to the Site.

b. those drawings known to Owner of physical conditions relating to existing surface or subsurface structures at the Site (except Underground Facilities).

c. reports and drawings known to Owner relating to Hazardous Environmental Conditions that have been identified at or adjacent to the Site.

d. Technical Data contained in such reports and drawings.

2. Owner will make copies of reports and drawings referenced above available to any Bidder on request. These reports and drawings are not part of the Contract Documents, but the Technical Data contained therein upon whose accuracy Bidder is entitled to rely, as provided in the General Conditions, has been identified and established in the Supplementary Conditions. Bidder is responsible for any interpretation or conclusion Bidder draws from any Technical Data or any other data, interpretations, opinions, or information contained in such reports or shown or indicated in such drawings.

3. If the Supplementary Conditions do not identify Technical Data, the default definition of Technical Data set forth in Article 1 of the General Conditions will apply.

B. Underground Facilities: Information and data shown or indicated in the Bidding Documents with respect to existing Underground Facilities at or contiguous to the Site are set forth in the Contract Documents and are based upon information and data furnished to Owner and Engineer by owners of such Underground Facilities, including Owner, or others.

C. Adequacy of Data: Provisions concerning responsibilities for the adequacy of data furnished to prospective Bidders with respect to subsurface conditions, other physical conditions, and Underground Facilities, and possible changes in the Bidding Documents due to differing or unanticipated subsurface or physical conditions appear in Paragraphs 5.03, 5.04, and 5.05 of the General Conditions. Provisions concerning responsibilities for the adequacy of data furnished to prospective Bidders with respect to a Hazardous Environmental Condition at the Site, if any, and possible changes in the Contract Documents due to any Hazardous Environmental Condition uncovered or revealed at the Site which was not shown or indicated in the Drawings or Specifications or identified in the Contract Documents to be within the scope of the Work, appear in Paragraph 5.06 of the General Conditions.

4.03 *Site Visit and Testing by Bidders*

A. Bidder shall conduct the required Site visit during normal working hours, and shall not disturb any ongoing operations at the Site.

B. Bidder is not required to conduct any subsurface testing, or exhaustive investigations of Site conditions.

C. On request, and to the extent Owner has control over the Site, and schedule permitting, the Owner will provide Bidder access to the Site to conduct such additional examinations, investigations, explorations, tests, and studies as Bidder deems necessary for preparing and submitting a successful Bid. Owner will not have any obligation to grant such access if doing so is not practical because of existing operations, security or safety concerns, or restraints on Owner's authority regarding the Site.

Copyright © 2013 National Society of Professional Engineers, American Council of Engineering Companies, and American Society of Civil Engineers. All rights reserved.

D. Bidder shall comply with all applicable Laws and Regulations regarding excavation and location of utilities, obtain all permits, and comply with all terms and conditions established by Owner or by property owners or other entities controlling the Site with respect to schedule, access, existing operations, security, liability insurance, and applicable safety programs.

E. Bidder shall fill all holes and clean up and restore the Site to its former condition upon completion of such explorations, investigations, tests, and studies.

4.04 *Owner's Safety Program*

A. Site visits and work at the Site may be governed by an Owner safety program. As the General Conditions indicate, if an Owner safety program exists, it will be noted in the Supplementary Conditions.

4.05 *Other Work at the Site*

A. Reference is made to Article 8 of the Supplementary Conditions for the identification of the general nature of other work of which Owner is aware (if any) that is to be performed at the Site by Owner or others (such as utilities and other prime contractors) and relates to the Work contemplated by these Bidding Documents. If Owner is party to a written contract for such other work, then on request, Owner will provide to each Bidder access to examine such contracts (other than portions thereof related to price and other confidential matters), if any.

ARTICLE 5 – BIDDER'S REPRESENTATIONS

5.01 It is the responsibility of each Bidder before submitting a Bid to:

A. examine and carefully study the Bidding Documents, and any data and reference items identified in the Bidding Documents;

B. visit the Site, conduct a thorough, alert visual examination of the Site and adjacent areas, and become familiar with and satisfy itself as to the general, local, and Site conditions that may affect cost, progress, and performance of the Work;

C. become familiar with and satisfy itself as to all Laws and Regulations that may affect cost, progress, and performance of the Work;

D. carefully study all: (1) reports of explorations and tests of subsurface conditions at or adjacent to the Site and all drawings of physical conditions relating to existing surface or subsurface structures at the Site that have been identified in the Supplementary Conditions, especially with respect to Technical Data in such reports and drawings, and (2) reports and drawings relating to Hazardous Environmental Conditions, if any, at or adjacent to the Site that have been identified in the Supplementary Conditions, especially with respect to Technical Data in such reports and drawings;

E. consider the information known to Bidder itself; information commonly known to contractors doing business in the locality of the Site; information and observations obtained from visits to the Site; the Bidding Documents; and the Site-related reports and drawings identified in the Bidding Documents, with respect to the effect of such information, observations, and documents on (1) the cost, progress, and performance of the Work; (2) the means, methods, techniques, sequences, and procedures of construction to be employed by Bidder; and (3) Bidder's safety precautions and programs;

F. agree, based on the information and observations referred to in the preceding paragraph, that at the time of submitting its Bid no further examinations, investigations, explorations, tests, studies, or data are necessary for the determination of its Bid for performance of the Work at the price bid and

Copyright © 2013 National Society of Professional Engineers, American Council of Engineering Companies, and American Society of Civil Engineers. All rights reserved.

within the times required, and in accordance with the other terms and conditions of the Bidding Documents;

G. become aware of the general nature of the work to be performed by Owner and others at the Site that relates to the Work as indicated in the Bidding Documents;

H. promptly give Engineer written notice of all conflicts, errors, ambiguities, or discrepancies that Bidder discovers in the Bidding Documents and confirm that the written resolution thereof by Engineer is acceptable to Bidder;

I. determine that the Bidding Documents are generally sufficient to indicate and convey understanding of all terms and conditions for the performance and furnishing of the Work; and

J. agree that the submission of a Bid will constitute an incontrovertible representation by Bidder that Bidder has complied with every requirement of this Article, that without exception the Bid and all prices in the Bid are premised upon performing and furnishing the Work required by the Bidding Documents.

~~ARTICLE 6 – PRE-BID CONFERENCE~~

~~6.01 A pre-Bid conference will be held at the time and location stated in the advertisement for bid. Representatives of Owner and Engineer will be present to discuss the Project. Bidders are encouraged to attend and participate in the conference. Engineer will transmit to all prospective Bidders of record such Addenda as Engineer considers necessary in response to questions arising at the conference. Oral statements may not be relied upon and will not be binding or legally effective.~~

ARTICLE 7 – INTERPRETATIONS AND ADDENDA

7.01 All questions about the meaning or intent of the Bidding Documents are to be submitted to Engineer in writing. Interpretations or clarifications considered necessary by Engineer in response to such questions will be issued by Addenda delivered to all parties recorded as having received the Bidding Documents. Questions received less than five days prior to the date for opening of Bids may not be answered. Only questions answered by Addenda will be binding. Oral and other interpretations or clarifications will be without legal effect.

7.02 Addenda may be issued to clarify, correct, supplement, or change the Bidding Documents.

ARTICLE 8 – BID SECURITY

8.01 A Bid must be accompanied by Bid security made payable to Owner in an amount of **5 percent (5%)** of Bidder's maximum Bid price (determined by adding sum of the unit prices on the bid form) and in the form of a certified check, bank money order, or a Bid bond (on the form included in the Bidding Documents) issued by a surety meeting the requirements of Paragraphs 6.01 and 6.02 of the General Conditions.

8.02 The Bid security of the apparent Successful Bidder will be retained until Owner awards the contract to such Bidder, and such Bidder has executed the Contract Documents, furnished the required contract security, and met the other conditions of the Notice of Award, whereupon the Bid security will be released. If the Successful Bidder fails to execute and deliver the Contract Documents and furnish the required contract security within 15 days after the Notice of Award, Owner may consider Bidder to be in default, annul the Notice of Award, and the Bid security of that Bidder will be forfeited. Such forfeiture shall be Owner's exclusive remedy if Bidder defaults.

8.03 The Bid security of other Bidders that Owner believes to have a reasonable chance of receiving the award may be retained by Owner until the earlier of seven days after the Effective Date of the

Copyright © 2013 National Society of Professional Engineers, American Council of Engineering Companies, and American Society of Civil Engineers. All rights reserved.

Contract or 61 days after the Bid opening, whereupon Bid security furnished by such Bidders will be released.

8.04 Bid security of other Bidders that Owner believes do not have a reasonable chance of receiving the award will be released within seven days after the Bid opening.

ARTICLE 9 – CONTRACT TIMES

9.01 The number of days within which, or the dates by which, Milestones are to be achieved and the Work is to be substantially completed and ready for final payment are set forth in the Agreement.

ARTICLE 10 – LIQUIDATED DAMAGES

10.01 Provisions for liquidated damages, if any, for failure to timely attain a Milestone, Substantial Completion, or completion of the Work in readiness for final payment, are set forth in the Agreement.

ARTICLE 11 – SUBSTITUTE AND "OR-EQUAL" ITEMS

11.01 The Contract for the Work, as awarded, will be on the basis of materials and equipment specified or described in the Bidding Documents, and those "or-equal" or substitute or materials and equipment subsequently approved by Engineer prior to the submittal of Bids and identified by Addendum. No item of material or equipment will be considered by Engineer as an "or-equal" or substitute unless written request for approval has been submitted by Bidder and has been received by Engineer at least 15 days prior to the date for receipt of Bids. Each such request shall comply with the requirements of Paragraphs 7.04 and 7.05 of the General Conditions. The burden of proof of the merit of the proposed item is upon Bidder. Engineer's decision of approval or disapproval of a proposed item will be final. If Engineer approves any such proposed item, such approval will be set forth in an Addendum issued to all prospective Bidders. Bidders shall not rely upon approvals made in any other manner.

11.02 All prices that Bidder sets forth in its Bid shall be based on the presumption that the Contractor will furnish the materials and equipment specified or described in the Bidding Documents, as supplemented by Addenda. Any assumptions regarding the possibility of post-Bid approvals of "or-equal" or substitution requests are made at Bidder's sole risk.

ARTICLE 12 – SUBCONTRACTORS, SUPPLIERS, AND OTHERS

12.01 A Bidder shall be prepared to retain specific Subcontractors, Suppliers, or other individuals or entities for the performance of the Work if required by the Bidding Documents (most commonly in the Specifications) to do so. If a prospective Bidder objects to retaining any such Subcontractor, Supplier, or other individual or entity, and the concern is not relieved by an Addendum, then the prospective Bidder should refrain from submitting a Bid.

12.02 Subsequent to the submittal of the Bid, Owner may not require the Successful Bidder or Contractor to retain any Subcontractor, Supplier, or other individual or entity against which Contractor has reasonable objection.

12.03 If apparent Successful Bidder declines to make any such substitution, Owner may award the Contract to the next lowest Bidder that proposes to use acceptable Subcontractors, Suppliers, or other individuals or entities. Declining to make requested substitutions will constitute grounds for forfeiture of the Bid security of any Bidder. Any Subcontractor, Supplier, individual, or entity so listed and against which Owner or Engineer makes no written objection prior to the giving of the Notice of Award will be deemed acceptable to Owner and Engineer subject to subsequent revocation of such acceptance as provided in Paragraph 7.06 of the General Conditions.

Copyright © 2013 National Society of Professional Engineers, American Council of Engineering Companies, and American Society of Civil Engineers. All rights reserved.

ARTICLE 13 – PREPARATION OF BID

13.01 The Bid Form is included with the Bidding Documents.

A. All blanks on the Bid Form shall be completed in ink and the Bid Form signed in ink. Erasures or alterations shall be initialed in ink by the person signing the Bid Form. A Bid price shall be indicated for each section, Bid item, alternate, adjustment unit price item, and unit price item listed therein.

B. If the Bid Form expressly indicates that submitting pricing on a specific alternate item is optional, and Bidder elects to not furnish pricing for such optional alternate item, then Bidder may enter the words "No Bid" or "Not Applicable."

13.02 A Bid by a corporation shall be executed in the corporate name by a corporate officer (whose title must appear under the signature), accompanied by evidence of authority to sign. The corporate address and state of incorporation shall be shown.

13.03 A Bid by a limited liability company shall be executed in the name of the firm by a member or other authorized person and accompanied by evidence of authority to sign. The state of formation of the firm and the official address of the firm shall be shown.

13.04 A Bid by an individual shall show the Bidder's name and official address.

13.05 A Bid by a joint venture shall be executed by an authorized representative of each joint venturer in the manner indicated on the Bid Form. The official address of the joint venture shall be shown.

13.06 All names shall be printed in ink below the signatures.

13.07 The Bid shall contain an acknowledgment of receipt of all Addenda, the numbers of which shall be filled in on the Bid Form.

13.08 Postal and e-mail addresses and telephone number for communications regarding the Bid shall be shown.

13.09 The Bid shall contain evidence of Bidder's authority and qualification to do business in the state where the Project is located, or Bidder shall covenant in writing to obtain such authority and qualification prior to award of the Contract and attach such covenant to the Bid. Bidder's state contractor license number, if any, shall also be shown on the Bid Form.

ARTICLE 14 – BASIS OF BID

14.01 *Unit Price*

A. Bidders shall submit a Bid on a unit price basis for each item of Work listed in the unit price section of the Bid Form.

B. The "Bid Price" (sometimes referred to as the extended price) for each unit price Bid item will be the product of the "Estimated Quantity" (which Owner or its representative has set forth in the Bid Form) for the item and the corresponding "Bid Unit Price" offered by the Bidder. The total of all unit price Bid items will be the sum of these "Bid Prices"; such total will be used by Owner for Bid comparison purposes. The final quantities and Contract Price will be determined in accordance with Paragraph 13.03 of the General Conditions.

C. Discrepancies between the multiplication of units of Work and unit prices will be resolved in favor of the unit prices. Discrepancies between the indicated sum of any column of figures and the correct sum thereof will be resolved in favor of the correct sum.

Copyright © 2013 National Society of Professional Engineers, American Council of Engineering Companies, and American Society of Civil Engineers. All rights reserved.

14.02 *Allowances*

A. For cash allowances the Bid price shall include such amounts as the Bidder deems proper for Contractor's overhead, costs, profit, and other expenses on account of cash allowances, if any, named in the Contract Documents, in accordance with Paragraph 13.02.B of the General Conditions.

ARTICLE 15 – SUBMITTAL OF BID

15.01 With each copy of the Bidding Documents, a Bidder is furnished one separate unbound copy of the Bid Form, and, if required, the Bid Bond Form. The unbound copy of the Bid Form is to be completed and submitted with the Bid security and the other documents required to be submitted under the terms of Article 7 of the Bid Form.

15.02 A Bid shall be received no later than the date and time prescribed and at the place indicated in the advertisement for bid and shall be enclosed in a plainly marked package with the Project title (and, if applicable, the designated portion of the Project for which the Bid is submitted), the name and address of Bidder, and shall be accompanied by the Bid security and other required documents. If a Bid is sent by mail or other delivery system, the sealed envelope containing the Bid shall be enclosed in a separate package plainly marked on the outside with the notation "BID ENCLOSED." A mailed Bid shall be addressed to the **City of Hancock, 399 Quincy Street, Hancock, Michigan 49930**.

15.03 Bids received after the date and time prescribed for the opening of bids, or not submitted at the correct location or in the designated manner, will not be accepted and will be returned to the Bidder unopened.

ARTICLE 16 – MODIFICATION AND WITHDRAWAL OF BID

16.01 A Bid may be withdrawn by an appropriate document duly executed in the same manner that a Bid must be executed and delivered to the place where Bids are to be submitted prior to the date and time for the opening of Bids. Upon receipt of such notice, the unopened Bid will be returned to the Bidder.

16.02 If a Bidder wishes to modify its Bid prior to Bid opening, Bidder must withdraw its initial Bid in the manner specified in Paragraph 16.01 and submit a new Bid prior to the date and time for the opening of Bids.

16.03 If within 24 hours after Bids are opened any Bidder files a duly signed written notice with Owner and promptly thereafter demonstrates to the reasonable satisfaction of Owner that there was a material and substantial mistake in the preparation of its Bid, that Bidder may withdraw its Bid, and the Bid security will be returned. Thereafter, if the Work is rebid, that Bidder will be disqualified from further bidding on the Work.

ARTICLE 17 – OPENING OF BIDS

17.01 Bids will be opened at the time and place indicated in the advertisement for bid and, unless obviously non-responsive, read aloud publicly via conference call. An abstract of the amounts of the base Bids and major alternates, if any, will be made available to Bidders after the opening of Bids.

ARTICLE 18 – BIDS TO REMAIN SUBJECT TO ACCEPTANCE

18.01 All Bids will remain subject to acceptance for the period of time stated in the Bid Form, but Owner may, in its sole discretion, release any Bid and return the Bid security prior to the end of this period.

EJCDC® C-200, Suggested Instructions to Bidders for Construction Contracts.
Copyright © 2013 National Society of Professional Engineers, American Council of Engineering Companies, and American Society of Civil Engineers. All rights reserved.

ARTICLE 19 – EVALUATION OF BIDS AND AWARD OF CONTRACT

19.01 Owner reserves the right to reject any or all Bids, including without limitation, nonconforming, nonresponsive, unbalanced, or conditional Bids. Owner will reject the Bid of any Bidder that Owner finds, after reasonable inquiry and evaluation, to not be responsible. If Bidder purports to add terms or conditions to its Bid, takes exception to any provision of the Bidding Documents, or attempts to alter the contents of the Contract Documents for purposes of the Bid, then the Owner will reject the Bid as nonresponsive; provided that Owner also reserves the right to waive all minor informalities not involving price, time, or changes in the Work.

19.02 If Owner awards the contract for the Work, such award shall be to the responsible Bidder submitting the lowest responsive Bid.

19.03 Evaluation of Bids

A. In evaluating Bids, Owner will consider whether or not the Bids comply with the prescribed requirements, and such alternates, unit prices, and other data, as may be requested in the Bid Form or prior to the Notice of Award.

B. For the determination of the apparent low Bidder when unit price bids are submitted, Bids will be compared on the basis of the total of the products of the estimated quantity of each item and unit price Bid for that item, together with any lump sum items.

19.04 In evaluating whether a Bidder is responsible, Owner will consider the qualifications of the Bidder and may consider the qualifications and experience of Subcontractors and Suppliers proposed for those portions of the Work for which the identity of Subcontractors and Suppliers must be submitted as provided in the Bidding Documents.

19.05 Owner may conduct such investigations as Owner deems necessary to establish the responsibility, qualifications, and financial ability of Bidders and any proposed Subcontractors or Suppliers.

ARTICLE 20 – BONDS AND INSURANCE

20.01 Article 6 of the General Conditions, as may be modified by the Supplementary Conditions, sets forth Owner's requirements as to performance and payment bonds and insurance. When the Successful Bidder delivers the Agreement (executed by Successful Bidder) to Owner, it shall be accompanied by required bonds and insurance documentation.

ARTICLE 21 – TERMINATION FOR CAUSE AND CONVENIENCE

21.01 The Contract may be terminated for the Owner's convenience in accordance with Article 16 of the General Conditions.

21.02 Contractor may stop work or terminate the Contractor in accordance with Article 16 of the General Conditions.

ARTICLE 22 – EQUAL EMPLOYMENT OPPORTUNITY

22.01 The Contractor will not discriminate against any employee or applicant for employment because of race, color, religion, sex, or national origin. The contractor will take affirmative action to ensure that applicants are employed, and that employees are treated during employment without regard to their race, color, religion, sex, or national origin. Such action shall include, but not be limited to the following: Employment, upgrading, demotion, or transfer; recruitment or recruitment advertising; layoff or termination; rates of pay or other forms of compensation; and selection for training, including apprenticeship. The contractor agrees to post in conspicuous places, available to employees

Copyright © 2013 National Society of Professional Engineers, American Council of Engineering Companies, and American Society of Civil Engineers. All rights reserved.

and applicants for employment, notices to be provided setting forth the provisions of this nondiscrimination clause.

22.02 The contractor will, in all solicitations or advertisements for employees placed by or on behalf of the contractor, state that all qualified applicants will receive considerations for employment without regard to race, color, religion, sex, or national origin.

22.03 The contractor will send to each labor union or representative of workers with which he has a collective bargaining agreement or other contract or understanding, a notice to be provided advising the said labor union or workers' representatives of the contractor's commitments under this section, and shall post copies of the notice in conspicuous places available to employees and applicants for employment.

22.04 The contractor will comply with all provisions of Executive Order 11246 of September 24, 1965, and of the rules, regulations, and relevant orders of the Secretary of Labor.

22.05 The contractor will furnish all information and reports required by Executive Order 11246 of September 24, 1965, and by rules, regulations, and orders of the Secretary of Labor, or pursuant thereto, and will permit access to his books, records, and accounts by the administering agency and the Secretary of Labor for purposes of investigation to ascertain compliance with such rules, regulations, and orders.

22.06 In the event of the contractor's noncompliance with the nondiscrimination clauses of this contract or with any of the said rules, regulations, or orders, this contract may be canceled, terminated, or suspended in whole or in part and the contractor may be declared ineligible for further Government contracts or federally assisted construction contracts in accordance with procedures authorized in Executive Order 11246 of September 24, 1965, and such other sanctions as may be imposed and remedies invoked as provided in Executive Order 11246 of September 24, 1965, or by rule, regulation, or order of the Secretary of Labor, or as otherwise provided by law.

22.07 The contractor will include the portion of the sentence immediately preceding paragraph (1) and the provisions of paragraphs (1) through (7) in every subcontract or purchase order unless exempted by rules, regulations, or orders of the Secretary of Labor issued pursuant to section 204 of Executive Order 11246 of September 24, 1965, so that such provisions will be binding upon each subcontractor or vendor. The contractor will take such action with respect to any subcontract or purchase order as the administering agency may direct as a means of enforcing such provisions, including sanctions for noncompliance: Provided, however, That in the event a contractor becomes involved in, or is threatened with, litigation with a subcontractor or vendor as a result of such direction by the administering agency the contractor may request the United States to enter into such litigation to protect the interests of the United States.

ARTICLE 23 – CONTRACT WORK HOURS AND SAFETY STANDARDS ACT

23.01 Overtime Requirements: No contractor or subcontractor contracting for any part of the contract work which may require or involve the employment of laborers or mechanics shall require or permit any such laborer or mechanic in any workweek in which he or she is employed on such work to work in excess of forty hours in such workweek unless such laborer or mechanic receives compensation at a rate not less than one and one-half times the basic rate of pay for all hours worked in excess of forty hours in such workweek.

23.02 Violation; liability for unpaid wages; liquidated damages: In the event of any violation of the clause set forth in paragraph (1) of this section the contractor and any subcontractor responsible therefor shall be liable for the unpaid wages. In addition, such contractor and subcontractor shall be liable to the United States (in the case of work done under contract for the District of Columbia or a territory, to

Copyright © 2013 National Society of Professional Engineers, American Council of Engineering Companies, and American Society of Civil Engineers. All rights reserved.

such District or to such territory), for liquidated damages. Such liquidated damages shall be computed with respect to each individual laborer or mechanic, including watchmen and guards, employed in violation of the clause set forth in paragraph (1) of this section, in the sum of $10 for each calendar day on which such individual was required or permitted to work in excess of the standard workweek of forty hours without payment of the overtime wages required by the clause set forth in paragraph (1) of this section.

23.03 Withholding for unpaid wages and liquidated damages: The State of Michigan, Michigan State Police shall upon its own action or upon written request of an authorized representative of the Department of Labor withhold or cause to be withheld, from any moneys payable on account of work performed by the contractor or subcontractor under any such contract or any other Federal contract with the same prime contractor, or any other federally-assisted contract subject to the Contract Work Hours and Safety Standards Act, which is held by the same prime contractor, such sums as may be determined to be necessary to satisfy any liabilities of such contractor or subcontractor for unpaid wages and liquidated damages as provided in the clause set forth in paragraph (2) of this section.

23.04 Subcontracts: The contractor or subcontractor shall insert in any subcontracts the clauses set forth in paragraph (1) through (4) of this section and also a clause requiring the subcontractors to include these clauses in any lower tier subcontracts. The prime contractor shall be responsible for compliance by any subcontractor or lower tier subcontractor with the clauses set forth in paragraphs (1) through (4) of this section.

ARTICLE 24 – SUSPENSION AND DEBARMENT

24.01 This contract is a covered transaction for purposes of 2 C.F.R. pt. 180 and 2 C.F.R. pt. 3000. As such the contractor is required to verify that none of the contractor, its principals (defined at 2 C.F.R. § 180.995), or its affiliates (defined at 2 C.F.R. § 180.905) are excluded (defined at 2 C.F.R. § 180.940) or disqualified (defined at 2 C.F.R. § 180.935).

24.02 The contractor must comply with 2 C.F.R. pt. 180, subpart C and 2 C.F.R. pt. 3000, subpart C and must include a requirement to comply with these regulations in any lower tier covered transaction it enters into.

24.03 This certification is a material representation of fact relied upon by City of Hancock. If it is later determined that the contractor did not comply with 2 C.F.R. pt. 180, subpart C and 2 C.F.R. pt. 3000, subpart C, in addition to remedies available to the State of Michigan, Michigan State Police, and the City of Hancock, the Federal Government may pursue available remedies, including but not limited to suspension and/or debarment.

24.04 The bidder or proposer agrees to comply with the requirements of 2 C.F.R. pt. 180, subpart C and 2 C.F.R. pt. 3000, subpart C while this offer is valid and throughout the period of any contract that may arise from this offer. The bidder or proposer further agrees to include a provision requiring such compliance in its lower tier covered transactions.

ARTICLE 25 – BYRD ANTI-LOBBYING AMENDMENT

25.01 Contractors who apply or bid for an award of $100,000 or more shall file the required certification. Each tier certifies to the tier above that it will not and has not used Federal appropriated funds to pay any person or organization for influencing or attempting to influence an officer or employee of any agency, a member of Congress, officer or employee of Congress, or an employee of a member of Congress in connection with obtaining any Federal contract, grant, or any other award covered by 31 U.S.C. § 1352. Each tier shall also disclose any lobbying with non-Federal funds that takes place in

Copyright © 2013 National Society of Professional Engineers, American Council of Engineering Companies, and American Society of Civil Engineers. All rights reserved.

connection with obtaining any Federal award. Such disclosures are forwarded from tier to tier up to the recipient.

25.02 A certification for Contracts, Grants, Loans and Cooperative Agreements shall be submitted with each bid exceeding $100,000.

ARTICLE 26 – PROCUREMENT OF RECOVERED MATERIALS

26.01 In the performance of this contract, the Contractor shall make maximum use of products containing recovered materials that are EPA designed items unless the product cannot be acquired:

1. Competitively within a timeframe providing form compliance with contract performance schedule;
2. Meeting contract performance requirements; or
3. At a reasonable price.

26.02 Information about this requirement, along with the list of EPA-designate items, is available at EPA's Comprehensive Procurement Guidelines web site, https://www.epa.gov/smm/comprehensive-procurement-guideline-cpg-program.

ARTICLE 27 – ACCESS TO RECORDS

27.01 The following access to records requirements apply to this contract:

A. The contractor agrees to provide State of Michigan, Michigan State Police, the City of Hancock, the FEMA Administrator, the Comptroller General of the United States, or any of their authorized representatives access to any books, documents, papers, and records of the Contractor which are directly pertinent to this contract for the purposes of making audits, examinations, excerpts, and transcriptions.

B. The Contractor agrees to permit any of the foregoing parties to reproduce by any means whatsoever or to copy excerpts and transcriptions as reasonably needed.

C. The contractor agrees to provide the FEMA Administrator or his authorized representatives access to construction or other work sites pertaining to the work being completed under the contract.

ARTICLE 28 – DHS SEAL, LOGO AND FLAGS

28.01 The contractor shall not use the DHS seal(s), logos, crests, or reproductions of flags or likenesses of DHS agency officials without specific FEMA pre- approval.

ARTICLE 29 – COMPLIANCE WITH FEDERAL LAW, REGULATIONS, AND EXECUTIVE ORDER

29.01 This is an acknowledgement that FEMA financial assistance will be used to fund the contract only. The contractor will comply will all applicable federal law, regulations, executive orders, FEMA policies, procedures, and directives.

ARTICLE 30 – NO OBLIGATION BY FEDERAL GOVERNMENT

30.01 The Federal Government is not a party to this contract and is not subject to any obligations or liabilities to the non-Federal entity, contractor, or any other party pertaining to any matter resulting from the contract.

Copyright © 2013 National Society of Professional Engineers, American Council of Engineering Companies, and American Society of Civil Engineers. All rights reserved.

ARTICLE 31 – PROGRAM FRAUD AND FALSE OR FRAUDULENT STATEMENTS OR RELATED ACTS

The contractor acknowledges that 31 U.S.C. Chap. 38 (Administrative Remedies for False Claims and Statements) applies to the contractor's actions pertaining to this contract.

Copyright © 2013 National Society of Professional Engineers, American Council of Engineering Companies, and American Society of Civil Engineers. All rights reserved.

DBA REQUIREMENTS

Contractor must make and document efforts to solicit small businesses, minority businesses, woman's business enterprises, and labor surplus area firms according to 2 CFR § 200.321 – Contracting with small and minority businesses, women's business enterprises, and labor surplus area firms.

The Contractor must take all necessary affirmative steps to assure that minority businesses, women' business enterprises, and labor surplus area firm are used when possible.

Affirmative steps must include:

(1) Placing qualified small and minority businesses and women's business enterprises on solicitation lists;

(2) Assuring that small and minority businesses, and women's business enterprises are solicited whenever they are potential sources;

(3) Dividing total requirements, when economically feasible, into smaller tasks or quantities to permit maximum participation by small and minority businesses, and women's business enterprises;

(4) Establishing delivery schedules, where the requirement permits, which encourage participation by small and minority businesses, and women's business enterprises;

(5) Using the services and assistance, as appropriate, of such organizations as the Small Business Administration and the Minority Business Development Agency of the Department of Commerce; and

(6) Requiring the prime contractor, if subcontracts are to be let, to take the affirmative steps listed in paragraphs (1) through (5) of this section.

For the contractor's information, attached is a Disadvantaged Business Enterprises (DBE) document as well Disadvantaged Business Enterprises (DBE) Requirements Frequently Asked Questions Regarding Contractor Compliance.

Disadvantaged Business Enterprises (DBE)

Prime contractors bidding on this project must follow, document, and maintain documentation of their Good Faith Efforts, as listed below, to ensure that Disadvantaged Business Enterprises (DBEs) have the opportunity to participate in the project by increasing DBE awareness of procurement efforts and outreach. Bidders must make the following Good Faith Efforts for any work that will be subcontracted.

1. Ensure DBEs are made aware of contracting opportunities to the fullest extent practicable through outreach and recruitment activities. Place DBEs on solicitation lists and solicit DBEs whenever they are potential sources.

2. Make information on forthcoming opportunities available to DBEs. Arrange time-frames for contracts and establish delivery schedules, where the requirements permit, in a way that encourages and facilitates participation by DBEs in the competitive process. Whenever possible, post solicitation for bids or proposals for a minimum of 30 calendar days before the bid or proposal closing date. The DBEs should be given a minimum of 5 days to respond to the posting.

3. Consider in the contracting process whether firms competing for large contracts can be subcontracted with DBEs. Divide total requirements, when economically feasible, into smaller tasks or quantities to permit maximum participation by DBEs in the competitive process.

4. Encourage contracting with a consortium of DBEs when a contract is too large for one DBE firm to handle individually.

5. Use the services and assistance of the Small Business Administration and the Minority Business Development Agency of the U.S. Department of Commerce.

Subsequent to compliance with the Good Faith Efforts, the following conditions also apply under the DBE requirements. Completed Good Faith Efforts Worksheets (Attachment 1), along with the required supporting documentation outlined in the instructions, must be submitted with your bid proposal. EPA form 6100-2 must also be provided at the pre-bid meeting. A copy of this form is available on the Forms and Guidance page of the Revolving Loan website.

1. The prime contractor must pay its subcontractor for work that has been satisfactorily completed no more than 30 days from the prime contractor's receipt of payment from the owner.

2. The prime contractor must notify the owner in writing prior to the termination of any DBE subcontractor for convenience by the prime contractor and employ the Good Faith Efforts if soliciting a replacement contractor.

3. If a DBE contractor fails to complete work under the subcontract for any reason, the prime contractor must employ the Good Faith Efforts if soliciting a replacement contractor.

4. The prime contractor must employ the Good Faith Efforts.

Disadvantaged Business Enterprise (DBE) Requirements
Frequently Asked Questions Regarding Contractor Compliance

Q: What is the Good Faith Efforts Worksheet form and how is it to be completed?

A: This form captures efforts by the prime contractor to solicit DBEs for each area of work type that will be subcontracted out. A separate Good Faith Efforts Worksheet must be provided by the prime contractor for each area of work type to be subcontracted out. There are specific instructions that accompany this form that prescribe minimum efforts which bidders must make in order to be in compliance with the DBE requirements.

Q: Can non-certified DBEs be used?

A: While non-certified DBEs can be used, only DBEs, MBEs, and WBEs that are certified by EPA, SBA, or MDOT (or by tribal, state and local governments, as long as their standards for certification meet or exceed the standards in EPA policy) can be counted toward the fair share goal. Proof of certification by one of these recognized and approved agencies should be sought from each DBE.

Q: How does a DBE get certified?

A: Applications for certification under MDOT can be found at http://mdotjboss.state.mi.us/UCP/LearnHowServlet.

Applications for certification under EPA can be found on EPA's Small Business Programs website at http://www.epa.gov/osbp/dbe_firm.htm under Certification Forms.

Q: If a bidder follows the MDOT DBE requirements, will the bidder be in compliance with the SRF/DWRF DBE requirements?

A: No. Federally funded highway projects utilize DBE goals, which require that a certain percentage of work be performed by DBE subcontractors. For SRF/DWRF projects, there is no financial goal. However, there is a solicitation effort goal. Bidders must use Good Faith Efforts for each and every area of work to be subcontracted out to obtain DBEs. The bidders are not required to use DBEs if the quotes are higher than non-DBE subcontractors. **There is no required DBE participation percentage contract goal for the SRF/DWRF.** However, if the SRF/DWRF project is part of a joint project with MDOT, the project can be excluded from SRF/DWRF DBE requirements (i.e., the Good Faith Efforts Worksheet is not required) as it would be difficult to comply with both programs' requirements.

Q. Must the Good Faith Efforts Worksheet and supporting documentation be turned in with the bid proposals?

A: Yes. This is a requirement to document that the contractor has complied with the DBE requirements and the Good Faith Efforts. These compliance efforts must be done during the bidding phase and not after-the-fact. It is highly recommended that the need for these efforts and the submittal of the forms with the bid proposals be emphasized at the pre-bid meetings. Failure to show that the Good Faith Efforts were complied with during the bidding process can lead to a prime contractor being found non-responsive.

Q: Does EPA form 6100-2 need to be provided at the pre-bid meeting?

A: Yes. The form must be made available at the pre-bid meeting.

Q: What kinds of documentation should a contractor provide to document solicitation efforts?

A: Documentation can include fax confirmation sheets, copies of solicitation letters/e-mails, printouts of online solicitations, printouts of online search results, affidavits of publication in newspapers, etc.

Q: How much time will compliance with the Good Faith Efforts require in terms of structuring an adequate bidding period?

A: Due to the extent of the efforts required, a minimum of 30 calendar days is recommended between bid posting and bid opening to ensure adequate time for contractors to locate certified DBEs and solicit quotes.

Q: How does a contractor locate certified DBEs?

A: The Michigan Department of Transportation has a directory of all Michigan certified entities located at http://mdotjboss.state.mi.us/UCP/. Additionally, the federal System for Award Management (SAM) is another place to search and can be found at www.sam.gov. SAM contains information from the former Central Contractor Registration (CCR) database.

Q: If the bidder does not intend to subcontract any work, what forms, if any, must be provided with the bid proposal?

A: The bidder should complete the Good Faith Efforts Worksheet with a notation that no subcontracting will be done. However, if the bidder is awarded the contract and then decides to subcontract work at any point, then the Good Faith Efforts must be made to solicit DBEs.

Q: In the perfect world, the Good Faith Efforts Worksheet is required to be turned in with the proposal. What if no forms are turned in with the bid proposal or forms are blank or incomplete? Should this be cause to determine that the bidder is non-responsive?

A: While the Good Faith Efforts Worksheet is important, it is more critical to confirm that the contractor complied with the DBE requirements prior to bid opening. The owner should contact the bidder as soon as deficiencies are noted for a determination/documentation of efforts taken to comply with the DBE requirements. Immediate submittal of the completed forms will be acceptable provided the Good Faith Efforts were made and it is just a matter of transferring information to the forms.

Q: If the prime contractor is a DBE, does he have to solicit DBE subcontractors?

A: Yes, the DBE requirements still apply if the prime intends to subcontract work out. Good Faith Efforts must be used to solicit DBEs.

Q: If the area of work is one where there are less than three DBE contractors, how is the contractor to document this?

A: Copies of printouts from MDOT and SAM showing no DBEs and advertisements soliciting quotes for all subcontract areas, including the questionable areas, will be adequate if the dates on the printouts are prior to the bid or proposal closing date.

QUALIFICATIONS STATEMENT

THE INFORMATION SUPPLIED IN THIS DOCUMENT IS CONFIDENTIAL TO THE EXTENT PERMITTED BY LAWS AND REGULATIONS

1. SUBMITTED BY:

Official Name of Firm: _____

Address: _____

_____

_____

2. SUBMITTED TO: _____

3. SUBMITTED FOR: _____

Owner: _____

Project Name: _____

_____

_____

_____

TYPE OF WORK: _____

_____

_____

4. CONTRACTOR'S CONTACT INFORMATION

Contact Person: _____

Title: _____

Phone: _____

Email: _____

EJCDC® C-451, Qualifications Statement.
Copyright © 2013 National Society of Professional Engineers, American Council of Engineering Companies, and American Society of Civil Engineers. All rights reserved.

5. AFFILIATED COMPANIES:

Name: _____

Address: _____

_____

_____

6. TYPE OF ORGANIZATION:

☐ SOLE PROPRIETORSHIP

Name of Owner: _____

Doing Business As: _____

Date of Organization: _____

☐ PARTNERSHIP

Date of Organization: _____

Type of Partnership: _____

Name of General Partner(s): _____

_____

_____

☐ CORPORATION

State of Organization: _____

Date of Organization: _____

Executive Officers:

- President: _____

- Vice President(s): _____

_____

_____

- Treasurer: _____

- Secretary: _____

Copyright © 2013 National Society of Professional Engineers, American Council of Engineering Companies, and American Society of Civil Engineers. All rights reserved.

☐ LIMITED LIABILITY COMPANY

State of Organization: _____

Date of Organization: _____

Members: _____

_____

_____

_____

☐ JOINT VENTURE

Sate of Organization: _____

Date of Organization: _____

Form of Organization: _____

Joint Venture Managing Partner

- Name: _____

- Address: _____

_____

_____

Joint Venture Managing Partner

- Name: _____

- Address: _____

_____

Joint Venture Managing Partner

- Name: _____

- Address: _____

_____

Copyright © 2013 National Society of Professional Engineers, American Council of Engineering Companies, and American Society of Civil Engineers. All rights reserved.

7. LICENSING

Jurisdiction: _____

Type of License: _____

License Number: _____

Jurisdiction: _____

Type of License: _____

License Number: _____

8. CERTIFICATIONS

CERTIFIED BY:

Disadvantage Business Enterprise: _____

Minority Business Enterprise: _____

Woman Owned Enterprise: _____

Small Business Enterprise: _____

Other (_____): _____

9. BONDING INFORMATION

Bonding Company: _____

Address: _____

_____

Bonding Agent: _____

Address: _____

_____

_____

Contact Name: _____

Phone: _____

Aggregate Bonding Capacity: _____

Available Bonding Capacity as of date of this submittal:_____

EJCDC® C-451, Qualifications Statement.
Copyright © 2013 National Society of Professional Engineers, American Council of Engineering Companies,
and American Society of Civil Engineers. All rights reserved.

10. FINANCIAL INFORMATION

Financial Institution: _____

Address: _____

_____

Account Manager: _____

Phone: _____

INCLUDE AS AN ATTACHMENT AN AUDITED BALANCE SHEET FOR EACH OF THE LAST 3 YEARS

11. CONSTRUCTION EXPERIENCE:

Current Experience:

List on **Schedule A** all uncompleted projects currently under contract (If Joint Venture list each participant's projects separately).

Previous Experience:

List on **Schedule B** all projects completed within the last 5 Years (If Joint Venture list each participant's projects separately).

Has firm listed in Section 1 ever failed to complete a construction contract awarded to it?

☐ YES ☐ NO

If YES, attach as an Attachment details including Project Owner's contact information.

Has any Corporate Officer, Partner, Joint Venture participant or Proprietor ever failed to complete a construction contract awarded to them in their name or when acting as a principal of another entity?

☐ YES ☐ NO

If YES, attach as an Attachment details including Project Owner's contact information.

Are there any judgments, claims, disputes or litigation pending or outstanding involving the firm listed in Section 1 or any of its officers (or any of its partners if a partnership or any of the individual entities if a joint venture)?

☐ YES ☐ NO

If YES, attach as an Attachment details including Project Owner's contact information.

Copyright © 2013 National Society of Professional Engineers, American Council of Engineering Companies, and American Society of Civil Engineers. All rights reserved.

12. SAFETY PROGRAM:

Name of Contractor's Safety Officer:_____

Include the following as attachments:

Provide as an Attachment Contractor's (and Contractor's proposed Subcontractors and Suppliers furnishing or performing Work having a value in excess of 10 percent of the total amount of the Bid) OSHA No. 500- Log & Summary of Occupational Injuries & Illnesses for the past 5 years.

Provide as an Attachment Contractor's (and Contractor's proposed Subcontractors and Suppliers furnishing or performing Work having a value in excess of 10 percent of the total amount of the Bid) list of all OSHA Citations & Notifications of Penalty (monetary or other) received within the last 5 years (indicate disposition as applicable) - IF NONE SO STATE.

Provide as an Attachment Contractor's (and Contractor's proposed Subcontractors and Suppliers furnishing or performing Work having a value in excess of 10 percent of the total amount of the Bid) list of all safety citations or violations under any state all received within the last 5 years (indicate disposition as applicable) - IF NONE SO STATE.

Provide the following for the firm listed in Section V (and for each proposed Subcontractor furnishing or performing Work having a value in excess of 10 percent of the total amount of the Bid) the following (attach additional sheets as necessary):

Workers' compensation Experience Modification Rate (EMR) for the last 5 years:

YEAR	_____	EMR	_____
YEAR	_____	EMR	_____
YEAR	_____	EMR	_____
YEAR	_____	EMR	_____
YEAR	_____	EMR	_____

Total Recordable Frequency Rate (TRFR) for the last 5 years:

YEAR	_____	TRFR	_____
YEAR	_____	TRFR	_____
YEAR	_____	TRFR	_____
YEAR	_____	TRFR	_____
YEAR	_____	TRFR	_____

EJCDC® C-451, Qualifications Statement.
Copyright © 2013 National Society of Professional Engineers, American Council of Engineering Companies, and American Society of Civil Engineers. All rights reserved.

Total number of man-hours worked for the last 5 Years:

YEAR	_____	TOTAL NUMBER OF MAN-HOURS	_____
YEAR	_____	TOTAL NUMBER OF MAN-HOURS	_____
YEAR	_____	TOTAL NUMBER OF MAN-HOURS	_____
YEAR	_____	TOTAL NUMBER OF MAN-HOURS	_____
YEAR	_____	TOTAL NUMBER OF MAN-HOURS	_____

Provide Contractor's (and Contractor's proposed Subcontractors and Suppliers furnishing or performing Work having a value in excess of 10 percent of the total amount of the Bid) Days Away From Work, Days of Restricted Work Activity or Job Transfer (DART) incidence rate for the particular industry or type of Work to be performed by Contractor and each of Contractor's proposed Subcontractors and Suppliers) for the last 5 years:

YEAR	_____	DART	_____
YEAR	_____	DART	_____
YEAR	_____	DART	_____
YEAR	_____	DART	_____
YEAR	_____	DART	_____

13. EQUIPMENT:

MAJOR EQUIPMENT:

List on **Schedule C** all pieces of major equipment available for use on Owner's Project.

Copyright © 2013 National Society of Professional Engineers, American Council of Engineering Companies, and American Society of Civil Engineers. All rights reserved.

I HEREBY CERTIFY THAT THE INFORMATION SUBMITTED HEREWITH, INCLUDING ANY ATTACHMENTS, IS TRUE TO THE BEST OF MY KNOWLEDGE AND BELIEF.

NAME OF ORGANIZATION: _____

BY: _____

TITLE: _____

DATED: _____

NOTARY ATTEST:

SUBSCRIBED AND SWORN TO BEFORE ME

THIS _____ DAY OF _____, 20___

NOTARY PUBLIC - STATE OF _____

MY COMMISSION EXPIRES:_____

REQUIRED ATTACHMENTS

1. Schedule A (Current Experience).
2. Schedule B (Previous Experience).
3. Schedule C (Major Equipment).
4. Audited balance sheet for each of the last 3 years for firm named in Section 1.
5. Evidence of authority for individuals listed in Section 7 to bind organization to an agreement.
6. Resumes of officers and key individuals (including Safety Officer) of firm named in Section 1.
7. Required safety program submittals listed in Section 13.
8. Additional items as pertinent.

EJCDC® C-451, Qualifications Statement.
Copyright © 2013 National Society of Professional Engineers, American Council of Engineering Companies, and American Society of Civil Engineers. All rights reserved.

SCHEDULE A

CURRENT EXPERIENCE

Project Name	Owner's Contact Person	Design Engineer	Contract Date	Type of Work	Status	Cost of Work
	Name: Address: Telephone:	Name: Company: Telephone:				
	Name: Address: Telephone:	Name: Company: Telephone:				
	Name: Address: Telephone:	Name: Company: Telephone:				
	Name: Address: Telephone:	Name: Company: Telephone:				
	Name: Address: Telephone:	Name: Company: Telephone:				
	Name: Address: Telephone:	Name: Company: Telephone:				
	Name: Address: Telephone:	Name: Company: Telephone:				

Copyright © 2013 National Society of Professional Engineers, American Council of Engineering Companies, and American Society of Civil Engineers. All rights reserved.

SCHEDULE B

PREVIOUS EXPERIENCE (Include ALL Projects Completed within last 5 years)

Project Name	Owner's Contact Person	Design Engineer	Contract Date	Type of Work	Status	Cost of Work
	Name: Address: Telephone:	Name: Company: Telephone:				
	Name: Address: Telephone:	Name: Company: Telephone:				
	Name: Address: Telephone:	Name: Company: Telephone:				
	Name: Address: Telephone:	Name: Company: Telephone:				
	Name: Address: Telephone:	Name: Company: Telephone:				
	Name: Address: Telephone:	Name: Company: Telephone:				
	Name: Address: Telephone:	Name: Company: Telephone:				

EJCDC® C-451, Qualifications Statement.
Copyright © 2013 National Society of Professional Engineers, American Council of Engineering Companies, and American Society of Civil Engineers. All rights reserved.

SCHEDULE B

PREVIOUS EXPERIENCE (Include ALL Projects Completed within last 5 years)

Project Name	Owner's Contact Person	Design Engineer	Contract Date	Type of Work	Status	Cost of Work
	Name: Address: Telephone:	Name: Company: Telephone:				
	Name: Address: Telephone:	Name: Company: Telephone:				
	Name: Address: Telephone:	Name: Company: Telephone:				
	Name: Address: Telephone:	Name: Company: Telephone:				
	Name: Address: Telephone:	Name: Company: Telephone:				
	Name: Address: Telephone:	Name: Company: Telephone:				
	Name: Address: Telephone:	Name: Company: Telephone:				

EJCDC® C-451, Qualifications Statement.
Copyright © 2013 National Society of Professional Engineers, American Council of Engineering Companies, and American Society of Civil Engineers. All rights reserved.

SCHEDULE C - LIST OF MAJOR EQUIPMENT AVAILABLE

ITEM	PURCHASE DATE	CONDITION	ACQUIRED VALUE

EJCDC® C-451, Qualifications Statement.
Copyright © 2013 National Society of Professional Engineers, American Council of Engineering Companies, and American Society of Civil Engineers. All rights reserved.

BID FORM

City of Hancock – STOR SEWER REPAIRS PHASE 2

TABLE OF CONTENTS

Page

Article 1 – Bid Recipient 46

Article 2 – Bidder's Acknowledgements 46

Article 3 – Bidder's Representations 46

Article 4 – Bidder's Certification 47

Article 5 - Basis of Bid 48

Article 6 – Time of Completion 50

Article 7 – Attachments to this Bid 50

Article 8 – Defined Terms 50

Article 9 – Bid Submittal 50

EJCDC® C-410, Bid Form for Construction Contracts.
Copyright © 2013 National Society of Professional Engineers, American Council of Engineering Companies, and American Society of Civil Engineers. All rights reserved.

ARTICLE 1 – BID RECIPIENT

1.01 This Bid is submitted to:

The City of Hancock, 399 Quincy Street, Hancock, Michigan 49930.

1.02 The undersigned Bidder proposes and agrees, if this Bid is accepted, to enter into an Agreement with Owner in the form included in the Bidding Documents to perform all Work as specified or indicated in the Bidding Documents for the prices and within the times indicated in this Bid and in accordance with the other terms and conditions of the Bidding Documents.

ARTICLE 2 – BIDDER'S ACKNOWLEDGEMENTS

2.01 Bidder accepts all of the terms and conditions of the Instructions to Bidders, including without limitation those dealing with the disposition of Bid security. This Bid will remain subject to acceptance for 60 days after the Bid opening, or for such longer period of time that Bidder may agree to in writing upon request of Owner.

ARTICLE 3 – BIDDER'S REPRESENTATIONS

3.01 In submitting this Bid, Bidder represents that:

A. Bidder has examined and carefully studied the Bidding Documents, and any data and reference items identified in the Bidding Documents, and hereby acknowledges receipt of the following Addenda:

Addendum No.	Addendum, Date

B. Bidder has visited the Site, conducted a thorough, alert visual examination of the Site and adjacent areas, and become familiar with and satisfied itself as to the general, local, and Site conditions that may affect cost, progress, and performance of the Work.

C. Bidder is familiar with and has satisfied itself as to all Laws and Regulations that may affect cost, progress, and performance of the Work.

D. Bidder has considered the information known to Bidder itself; information commonly known to contractors doing business in the locality of the Site; information and observations obtained from visits to the Site; the Bidding Documents; and any Site-related reports and drawings identified in the Bidding Documents, with respect to the effect of such information, observations, and documents on (1) the cost, progress, and performance of the Work; (2) the means, methods, techniques, sequences, and procedures of construction to be employed by Bidder; and (3) Bidder's safety precautions and programs.

E. Bidder agrees, based on the information and observations referred to in the preceding paragraph, that no further examinations, investigations, explorations, tests, studies, or data are necessary for the determination of this Bid for performance of the Work at the price bid and within the times required, and in accordance with the other terms and conditions of the Bidding Documents.

Copyright © 2013 National Society of Professional Engineers, American Council of Engineering Companies, and American Society of Civil Engineers. All rights reserved.

F. Bidder is aware of the general nature of work to be performed by Owner and others at the Site that relates to the Work as indicated in the Bidding Documents.

G. Bidder has given Engineer written notice of all conflicts, errors, ambiguities, or discrepancies that Bidder has discovered in the Bidding Documents and confirms that the written resolution thereof by Engineer is acceptable to Bidder.

H. The Bidding Documents are generally sufficient to indicate and convey understanding of all terms and conditions for the performance and furnishing of the Work.

I. The submission of this Bid constitutes an incontrovertible representation by Bidder that Bidder has complied with every requirement of this Article, and that without exception the Bid and all prices in the Bid are premised upon performing and furnishing the Work required by the Bidding Documents.

ARTICLE 4 – BIDDER'S CERTIFICATION

4.01 Bidder certifies that:

A. This Bid is genuine and not made in the interest of or on behalf of any undisclosed individual or entity and is not submitted in conformity with any collusive agreement or rules of any group, association, organization, or corporation;

B. Bidder has not directly or indirectly induced or solicited any other Bidder to submit a false or sham Bid;

C. Bidder has not solicited or induced any individual or entity to refrain from bidding; and

D. Bidder has not engaged in corrupt, fraudulent, collusive, or coercive practices in competing for the Contract. For the purposes of this Paragraph 4.01.D:

1. "corrupt practice" means the offering, giving, receiving, or soliciting of any thing of value likely to influence the action of a public official in the bidding process;

2. "fraudulent practice" means an intentional misrepresentation of facts made (a) to influence the bidding process to the detriment of Owner, (b) to establish bid prices at artificial non-competitive levels, or (c) to deprive Owner of the benefits of free and open competition;

3. "collusive practice" means a scheme or arrangement between two or more Bidders, with or without the knowledge of Owner, a purpose of which is to establish bid prices at artificial, non-competitive levels; and

4. "coercive practice" means harming or threatening to harm, directly or indirectly, persons or their property to influence their participation in the bidding process or affect the e execution of the Contract.

Copyright © 2013 National Society of Professional Engineers, American Council of Engineering Companies, and American Society of Civil Engineers. All rights reserved.

ARTICLE 5 – BASIS OF BID

Item No.	Description	Unit	Estimated Quantity	Bid Unit Price	Bid Price
1	_Mobilization	LSUM	1		
2	Clearing	Acre	0.05		
3	Dr Structure, Rem	Ea	1		
4	Sewer, Rem, Less than 24 inch	Ft	52		
5	Sewer, Rem, 24 inch to 48 inch	Ft	228		
6	Curb and Gutter, Rem	Ft	42		
7	Sidewalk, Rem	Syd	57		
8	Excavation, Earth	Cyd	998		
9	_Flowable Fill, Non-Structural	Cyd	4		
10	Erosion Control, Inlet Protection, Fabric Drop	Ea	8		
11	Erosion Control, Silt Fence	Ft	300		
12	Subbase, CIP	Cyd	309		
13	Aggregate Base, 6 inch	Syd	925		
14	Sewer, Cl II, 12 inch, Tr Det B	Ft	141		
15	Sewer, Cl III, 24 inch, Tr Det B	Ft	96		
16	Sewer, Cl IV, 24 inch, Tr Det A	Ft	132		
17	Sewer, Cl IV, 12 inch, Tr Det B	Ft	27		
18	Sewer Bulkhead, 12 inch	Ea	1		
19	Video Taping Sewer and Culv Pipe	Ft	396		
20	Dr Structure Cover, Adj, Case 1	Ea	1		
21	Dr Structure Cover, Type B	Ea	1		
22	Dr Structure Cover, Type E	Ea	1		
23	Dr Structure, 48 inch dia	Ea	2		
24	Dr Structure, Tap, 12 inch	Ea	4		
25	Dr Structure, Tap, 24 inch	Ea	3		
26	HMA Surface, Rem	Syd	656		
27	HMA, LVSP	Ton	185		
28	Steel Sheet Piling, Temp	Sft	1240		
29	Driveway, Reinf Conc, 6 inch	Syd	54		
30	Curb and Gutter, Conc, Det F2	Ft	12		
31	Driveway Opening, Conc, Det M	Ft	30		
32	Barricade, Type III, High Intensity, Double Sided, Lighted, Furn	Ea	16		
33	Barricade, Type III, High Intensity, Double Sided, Lighted, Oper	Ea	16		

Copyright © 2013 National Society of Professional Engineers, American Council of Engineering Companies, and American Society of Civil Engineers. All rights reserved.

Item No.	Description	Unit	Estimated Quantity	Bid Unit Price	Bid Price
34	Pedestrian Type II Barricade, Temp	Ea	2		
35	Lighted Arrow, Type C, Furn	Ea	1		
36	Lighted Arrow, Type C, Oper	Ea	1		
37	Minor Traf Devices	LSUM	1		
38	Plastic Drum, High Intensity, Lighted, Furn	Ea	25		
39	Plastic Drum, High Intensity, Lighted, Oper	Ea	25		
40	Sign, Type B, Temp, Prismatic, Furn	Sft	324		
41	Sign, Type B, Temp, Prismatic, Oper	Sft	324		
42	Sign, Type B, Temp, Prismatic, Spec, Furn	Sft	12		
43	Sign, Type B, Temp, Prismatic, Spec, Oper	Sft	12		
44	_Remove Existing Riprap and Salvage	Syd	211		
45	Slope Restoration, Type A	Syd	85		
46	Slope Restoration, Type B	Syd	178		
47	Slope Restoration, Type D	Syd	74		
48	Contractor Staking, Road Only	LSUM	1		
49	_Contractor QC Testing	LSUM	1		
Total of Lump Sum and Unit Price Bids (Items 1-49)=					$

ALTERNATE 1

Item No.	Description	Unit	Estimated Quantity	Bid Unit Price	Bid Price
50	Structures, Rem	LSUM	1		
51	Aggregate, 6A	Cyd	5		
52	Railing for Steps	Ft	33		
53	Sidewalk, Conc, 4 inch	Sft	230		
Total of Lump Sum and Unit Price Bids (Items 50-53) =					$

Total of Lump Sum and Unit Price Bids = Total Bid Price (Items 1-53)	$

Bidder acknowledges that (1) each Bid Unit Price includes an amount considered by Bidder to be adequate to cover Contractor's overhead and profit for each separately identified item, and (2) estimated quantities are not guaranteed, and are solely for the purpose of comparison of Bids, and final payment for all unit price Bid items will be based on actual quantities, determined as provided in the Contract Documents.

Use of Alternates: Determination of the lowest bid shall be on the basis of the sum of the Base Bid and any additive Alternates the Owner accepts, in the order in which they are listed only.

Copyright © 2013 National Society of Professional Engineers, American Council of Engineering Companies, and American Society of Civil Engineers. All rights reserved.

The Owner will accept an Alternate only if the other previously listed Alternates are also accepted, unless acceptance by the Owner of Alternates in a different order does not affect determination of the low bidder in any way.

ARTICLE 6 – TIME OF COMPLETION

6.01 Bidder agrees that the Work will be substantially complete and will be completed and ready for final payment in accordance with Paragraph 15.06 of the General Conditions on or before the dates or within the number of calendar days indicated in the Agreement.

6.02 Bidder accepts the provisions of the Agreement as to liquidated damages.

ARTICLE 7 – ATTACHMENTS TO THIS BID

7.01 The following documents are submitted with and made a condition of this Bid:

A. Required Bid security;

B. List of Proposed Subcontractors;

C. List of Project References;

D. Required Bidder Qualification Statement with supporting data if requested within 10 days per Article 3 of the Instructions to Bidders;

E. Certification for Contracts, Grants, Loans and Cooperative Agreements, if bid exceeds $100,000; and

F. Paperwork showing that DBE Requirements were met.

ARTICLE 8 – DEFINED TERMS

8.01 The terms used in this Bid with initial capital letters have the meanings stated in the Instructions to Bidders, the General Conditions, and the Supplementary Conditions.

ARTICLE 9 – BID SUBMITTAL

BIDDER: *[Indicate correct name of bidding entity]*

_____

By: *[Signature]* _____

[Printed name] _____
(If Bidder is a corporation, a limited liability company, a partnership, or a joint venture, attach evidence of authority to sign.)

Attest: *[Signature]* _____

[Printed name] and Title _____

Submittal Date: _____

Address for giving notices:

_____

EJCDC® C-410, Bid Form for Construction Contracts.
Copyright © 2013 National Society of Professional Engineers, American Council of Engineering Companies, and American Society of Civil Engineers. All rights reserved.

Telephone Number: _____

Fax Number: _____

Contact Name and e-mail address: _____

_____

Bidder's License No.: _____
(where applicable)

EJCDC® C-410, Bid Form for Construction Contracts.
Copyright © 2013 National Society of Professional Engineers, American Council of Engineering Companies, and American Society of Civil Engineers. All rights reserved.

BID BOND

Any singular reference to Bidder, Surety, Owner or other party shall be considered plural where applicable.

BIDDER *(Name and Address)*:

SURETY *(Name, and Address of Principal Place of Business)*:

OWNER *(Name and Address)*:

BID

Bid Due Date:

Description *(Project Name— Include Location)*:

BOND

Bond Number:

Date:

Penal sum _____ $ _____

(Words) (Figures)

Surety and Bidder, intending to be legally bound hereby, subject to the terms set forth below, do each cause this Bid Bond to be duly executed by an authorized officer, agent, or representative.

BIDDER	**SURETY**
_____ (Seal)	_____ (Seal)
Bidder's Name and Corporate Seal	Surety's Name and Corporate Seal
By: _____	By: _____
Signature	Signature (Attach Power of Attorney)
_____	_____
Print Name	Print Name
_____	_____
Title	Title
Attest: _____	Attest: _____
Signature	Signature
Title	Title

Note: Addresses are to be used for giving any required notice.
Provide execution by any additional parties, such as joint venturers, if necessary.

1. Bidder and Surety, jointly and severally, bind themselves, their heirs, executors, administrators, successors, and assigns to pay to Owner upon default of Bidder the penal sum set forth on the face of this Bond. Payment of the penal sum is the extent of Bidder's and Surety's liability. Recovery of such penal sum under the terms of this Bond shall be Owner's sole and exclusive remedy upon default of Bidder.

2. Default of Bidder shall occur upon the failure of Bidder to deliver within the time required by the Bidding Documents (or any extension thereof agreed to in writing by Owner) the executed Agreement required by the Bidding Documents and any performance and payment bonds required by the Bidding Documents.

3. This obligation shall be null and void if:

3.1 Owner accepts Bidder's Bid and Bidder delivers within the time required by the Bidding Documents (or any extension thereof agreed to in writing by Owner) the executed Agreement required by the Bidding Documents and any performance and payment bonds required by the Bidding Documents, or

3.2 All Bids are rejected by Owner, or

3.3 Owner fails to issue a Notice of Award to Bidder within the time specified in the Bidding Documents (or any extension thereof agreed to in writing by Bidder and, if applicable, consented to by Surety when required by Paragraph 5 hereof).

4. Payment under this Bond will be due and payable upon default of Bidder and within 30 calendar days after receipt by Bidder and Surety of written notice of default from Owner, which notice will be given with reasonable promptness, identifying this Bond and the Project and including a statement of the amount due.

5. Surety waives notice of any and all defenses based on or arising out of any time extension to issue Notice of Award agreed to in writing by Owner and Bidder, provided that the total time for issuing Notice of Award including extensions shall not in the aggregate exceed 120 days from the Bid due date without Surety's written consent.

6. No suit or action shall be commenced under this Bond prior to 30 calendar days after the notice of default required in Paragraph 4 above is received by Bidder and Surety and in no case later than one year after the Bid due date.

7. Any suit or action under this Bond shall be commenced only in a court of competent jurisdiction located in the state in which the Project is located.

8. Notices required hereunder shall be in writing and sent to Bidder and Surety at their respective addresses shown on the face of this Bond. Such notices may be sent by personal delivery, commercial courier, or by United States Registered or Certified Mail, return receipt requested, postage pre-paid, and shall be deemed to be effective upon receipt by the party concerned.

9. Surety shall cause to be attached to this Bond a current and effective Power of Attorney evidencing the authority of the officer, agent, or representative who executed this Bond on behalf of Surety to execute, seal, and deliver such Bond and bind the Surety thereby.

10. This Bond is intended to conform to all applicable statutory requirements. Any applicable requirement of any applicable statute that has been omitted from this Bond shall be deemed to be included herein as if set forth at

length. If any provision of this Bond conflicts with any applicable statute, then the provision of said statute shall govern and the remainder of this Bond that is not in conflict therewith shall continue in full force and effect.

11. The term "Bid" as used herein includes a Bid, offer, or proposal as applicable.

APPENDIX A 44 C.F.R. PART 18 — CERTIFICATION REGARDING LOBBYING

Certification for Contracts, Grants, Loans, and Cooperative Agreements

(To be submitted with each bid or offer exceeding $100,000)

The undersigned [Contractor] certifies, to the best of his or her knowledge, that:

1. No Federal appropriated funds have been paid or will be paid, by or on behalf of the undersigned, to any person for influencing or attempting to influence an officer or employee of an agency, a Member of Congress, an officer or employee of Congress, or an employee of a Member of Congress in connection with the awarding of any Federal contract, the making of any Federal grant, the making of any Federal loan, the entering into of any cooperative agreement, and the extension, continuation, renewal, amendment, or modification of any Federal contract, grant, loan, or cooperative agreement.

2. If any funds other than Federal appropriated funds have been paid or will be paid to any person for influencing or attempting to influence an officer or employee of any agency, a Member of Congress, an officer or employee of Congress, or an employee of a Member of Congress in connection with this Federal contract, grant, loan, or cooperative agreement, the undersigned shall complete and submit Standard Form- LLL, "Disclosure Form to Report Lobbying," in accordance with its instructions.

3. The undersigned shall require that the language of this certification be included in the award documents for all subawards at all tiers (including subcontracts, subgrants, and contracts under grants, loans, and cooperative agreements) and that all subrecipients shall certify and disclose accordingly.

   This certification is a material representation of fact upon which reliance was placed when this transaction was made or entered into. Submission of this certification is a prerequisite for making or entering into this transaction imposed by 31, U.S.C. § 1352 (as amended by the Lobbying Disclosure Act of 1995). Any person who fails to file the required certification shall be subject to a civil penalty of not less than $10,000 and not more than $100,000 for each such failure.

   The Contractor, _____, certifies or affirms the truthfulness and accuracy of each statement of its certification and disclosure, if any. In addition, the Contractor understands and agrees that the provisions of 31 U.S.C, § 3801 et seq., apply to this certification and disclosure, if any.

   _____

   Signature of Contractor's Authorized Official

   _____

   Name and Title of Contractor's Authorized Official

   _____

   Date:

CONTRACT DOCUMENTS

EJCDC
ENGINEERS JOINT CONTRACT DOCUMENTS COMMITTEE

NOTICE OF AWARD

Date of Issuance:

Owner:	City of Hancock	Owner's Contract No.:	PW 157
Engineer:	OHM Advisors	Engineer's Project No.:	7030-18-0030
Project:	Storm Sewer Repairs Phase 2	Contract Name:	Storm Sewer Repairs Phase 2

Bidder:

Bidder's Address:

TO BIDDER:

You are notified that Owner has accepted your Bid dated [_____] for the above Contract, and that you are the Successful Bidder and are awarded a Contract for:

_____.

[describe Work, alternates, or sections of Work awarded]

The Contract Price of the awarded Contract is: $_____ *[subject to unit prices]*

You must comply with the following conditions precedent within 15 days of the date of receipt of this Notice of Award:

1. Deliver to Owner the following documents:
   a. Performance and Payment Bonds.
   b. Certificate of Insurance naming OHM Advisors and Owner as additional insured.
   c. Schedule.

Failure to comply with these conditions within the time specified will entitle Owner to consider you in default, annul this Notice of Award, and declare your Bid security forfeited.

Within ten days after you comply with the above conditions, Owner will return to you one fully executed counterpart of the Agreement, together with any additional copies of the Contract Documents as indicated in Paragraph 2.02 of the General Conditions.

Owner**:**

Authorized Signature

By:

Title:

Copy: Engineer

AGREEMENT
BETWEEN OWNER AND CONTRACTOR
FOR CONSTRUCTION CONTRACT (STIPULATED PRICE)

THIS AGREEMENT is by and between **The City of Hancock** ("Owner") and ("Contractor").

Owner and Contractor hereby agree as follows:

ARTICLE 1 – WORK

1.01 Contractor shall complete all Work as specified or indicated in the Contract Documents. The Work is generally described as follows: **Storm sewer replacement at four locations within the City of Hancock. Project includes the removal and replacement of existing storm sewer pipes, removal and installation of pre-cast concrete storm structures, HMA paving, concrete curb and gutter, rip rap, temporary sheet piling, and associated restoration.**

ARTICLE 2 – THE PROJECT

2.01 The Project, of which the Work under the Contract Documents is a part, is generally described as follows: ***Storm damage repair to four locations within the City of Hancock. Location 1 includes the replacement of an existing storm sewer on Forest Street with 27 feet of 12 inch concrete south of the intersection of Jasberg Street. Location 2 includes the replacement of an existing storm sewer and structure with 132 feet of 24 inch concrete pipe and a pre-cast structure between Navy Street and Lake Avenue south of Dakota Street. Location 3 includes the replacement of an existing storm sewer on Tezcuco Street south of Hancock Street with 96 feet of 24 inch concrete pipe. Location 4 includes the replacement of an existing storm sewer west of the Dunstan Street and Mason Street intersection with 141 feet of 12 inch concrete pipe and new drainage structure.***

ARTICLE 3 – ENGINEER

3.01 The Project has been designed by **OHM Advisors**.

3.02 The Owner has retained **OHM Advisors** ("Engineer") to act as Owner's representative, assume all duties and responsibilities, and have the rights and authority assigned to Engineer in the Contract Documents in connection with the completion of the Work in accordance with the Contract Documents.

ARTICLE 4 – CONTRACT TIMES

4.01 *Time of the Essence*

A. All time limits for Milestones, if any, Substantial Completion, and completion and readiness for final payment as stated in the Contract Documents are of the essence of the Contract.

EJCDC® C-520, Agreement Between Owner and Contractor for Construction Contract (Stipulated Price).
Copyright © 2013 National Society of Professional Engineers, American Council of Engineering Companies, and American Society of Civil Engineers. All rights reserved.

4.02 *Contract Times: Dates*

A. The Work will be substantially completed on or before **October 1, 2021**, and completed and ready for final payment in accordance with Paragraph 15.06 of the General Conditions on or before **October 15, 2021**.

4.03 *Liquidated Damages*

A. Contractor and Owner recognize that time is of the essence as stated in Paragraph 4.01 above and that Owner will suffer financial and other losses if the Work is not completed and Milestones not achieved within the times specified in Paragraph 4.02 above, plus any extensions thereof allowed in accordance with the Contract. The parties also recognize the delays, expense, and difficulties involved in proving in a legal or arbitration proceeding the actual loss suffered by Owner if the Work is not completed on time. Accordingly, instead of requiring any such proof, Owner and Contractor agree that as liquidated damages for delay (but not as a penalty):

1. Substantial Completion: Contractor shall pay Owner $ **200.00** for each day that expires after the time (as duly adjusted pursuant to the Contract) specified in Paragraph 4.02.A above for Substantial Completion until the Work is substantially complete.

2. Completion of Remaining Work: After Substantial Completion, if Contractor shall neglect, refuse, or fail to complete the remaining Work within the Contract Time (as duly adjusted pursuant to the Contract) for completion and readiness for final payment, Contractor shall pay Owner $**200.00** for each day that expires after such time until the Work is completed and ready for final payment.

3. Liquidated damages for failing to timely attain Substantial Completion and final completion are not additive and will not be imposed concurrently.

ARTICLE 5 – CONTRACT PRICE

5.01 Owner shall pay Contractor for completion of the Work in accordance with the Contract Documents the amounts that follow, subject to adjustment under the Contract:

A. For all Unit Price Work, an amount equal to the sum of the extended prices (established for each separately identified item of Unit Price Work by multiplying the unit price times the actual quantity of that item): See attached Bid Form.

The extended prices for Unit Price Work set forth as of the Effective Date of the Contract are based on estimated quantities. As provided in Paragraph 13.03 of the General Conditions, estimated quantities are not guaranteed, and determinations of actual quantities and classifications are to be made by Engineer.

B. For all Work, at the prices stated in Contractor's Bid, attached hereto as an exhibit.

ARTICLE 6 – PAYMENT PROCEDURES

6.01 *Submittal and Processing of Payments*

A. Contractor shall submit Applications for Payment in accordance with Article 15 of the General Conditions. Applications for Payment will be processed by Engineer as provided in the General Conditions.

EJCDC® C-520, Agreement Between Owner and Contractor for Construction Contract (Stipulated Price).
Copyright © 2013 National Society of Professional Engineers, American Council of Engineering Companies, and American Society of Civil Engineers. All rights reserved.

6.02 *Progress Payments; Retainage*

A. Owner shall make progress payments on account of the Contract Price on the basis of Contractor's Applications for Payment on or about the **20th** day of each month during performance of the Work as provided in Paragraph 6.02.A.1 below, provided that such Applications for Payment have been submitted in a timely manner and otherwise meet the requirements of the Contract. All such payments will be measured by the Schedule of Values established as provided in the General Conditions (and in the case of Unit Price Work based on the number of units completed) or, in the event there is no Schedule of Values, as provided elsewhere in the Contract.

1. Prior to Substantial Completion, progress payments will be made in an amount equal to the percentage indicated below but, in each case, less the aggregate of payments previously made and less such amounts as Owner may withhold, including but not limited to liquidated damages, in accordance with the Contract

a. **95** percent of Work completed (with the balance being retainage).

b. **95** percent of cost of materials and equipment not incorporated in the Work (with the balance being retainage).

B. Upon Substantial Completion of the entire construction to be provided under the Contract Documents, Owner shall pay an amount sufficient to increase total payments to Contractor to **100** percent of the Work completed, less such amounts set off by Owner pursuant to Paragraph 15.01.E of the General Conditions, and less **200** percent of Engineer's estimate of the value of Work to be completed or corrected as shown on the punch list of items to be completed or corrected prior to final payment.

6.03 *Final Payment*

A. Upon final completion and acceptance of the Work in accordance with Paragraph 15.06 of the General Conditions, Owner shall pay the remainder of the Contract Price as recommended by Engineer as provided in said Paragraph 15.06.

ARTICLE 7 – INTEREST

7.01 All amounts not paid when due shall bear interest at the rate of ***10*** percent per annum.

ARTICLE 8 – CONTRACTOR'S REPRESENTATIONS

8.01 In order to induce Owner to enter into this Contract, Contractor makes the following representations:

A. Contractor has examined and carefully studied the Contract Documents, and any data and reference items identified in the Contract Documents.

B. Contractor has visited the Site, conducted a thorough, alert visual examination of the Site and adjacent areas, and become familiar with and is satisfied as to the general, local, and Site conditions that may affect cost, progress, and performance of the Work.

C. Contractor is familiar with and is satisfied as to all Laws and Regulations that may affect cost, progress, and performance of the Work.

D. Contractor has considered the information known to Contractor itself; information commonly known to contractors doing business in the locality of the Site; information and observations obtained from visits to the Site; the Contract Documents; and the Site-related reports and drawings identified in the Contract Documents, with respect to the effect of

EJCDC® C-520, Agreement Between Owner and Contractor for Construction Contract (Stipulated Price).
Copyright © 2013 National Society of Professional Engineers, American Council of Engineering Companies, and American Society of Civil Engineers. All rights reserved.

such information, observations, and documents on (1) the cost, progress, and performance of the Work; (2) the means, methods, techniques, sequences, and procedures of construction to be employed by Contractor; and (3) Contractor's safety precautions and programs.

E. Based on the information and observations referred to in the preceding paragraph, Contractor agrees that no further examinations, investigations, explorations, tests, studies, or data are necessary for the performance of the Work at the Contract Price, within the Contract Times, and in accordance with the other terms and conditions of the Contract.

F. Contractor is aware of the general nature of work to be performed by Owner and others at the Site that relates to the Work as indicated in the Contract Documents.

G. Contractor has given Engineer written notice of all conflicts, errors, ambiguities, or discrepancies that Contractor has discovered in the Contract Documents, and the written resolution thereof by Engineer is acceptable to Contractor.

H. The Contract Documents are generally sufficient to indicate and convey understanding of all terms and conditions for performance and furnishing of the Work.

I. Contractor's entry into this Contract constitutes an incontrovertible representation by Contractor that without exception all prices in the Agreement are premised upon performing and furnishing the Work required by the Contract Documents.

ARTICLE 9 – CONTRACT DOCUMENTS

9.01 *Contents*

A. The Contract Documents consist of the following:

1. This Agreement (pages 1 to 10, inclusive).
2. General Conditions (pages i to 67, inclusive).
3. Special Provisions as listed in the table of contents of the Project Manual.
4. Drawings as listed in the table of contents of the Project Manual.
5. Addenda (numbers ___ to ___, inclusive).
6. Exhibits to this Agreement (enumerated as follows):
    a. Contractor's Bid (pages ___ to ___, inclusive).
7. The following which may be delivered or issued on or after the Effective Date of the Contract and are not attached hereto:
    a. Notice to Proceed.
    b. Work Change Directives.
    c. Change Orders.
    d. Field Orders.

B. The documents listed in Paragraph 9.01.A are attached to this Agreement (except as expressly noted otherwise above).

C. There are no Contract Documents other than those listed above in this Article 9.

D. The Contract Documents may only be amended, modified, or supplemented as provided in the General Conditions.

EJCDC® C-520, Agreement Between Owner and Contractor for Construction Contract (Stipulated Price).
Copyright © 2013 National Society of Professional Engineers, American Council of Engineering Companies, and American Society of Civil Engineers. All rights reserved.

ARTICLE 10 – TERMINATION FOR CAUSE AND CONVENIENCE

10.01 *The Contract may be terminated for the Owner's convenience in accordance with Article 16 of the General Conditions.*

10.02 *Contractor may stop work or terminate the Contractor in accordance with Article 16 of the General Conditions.*

ARTICLE 11 – EQUAL EMPLOYMENT OPPORTUNITY

11.01 *The Contractor will not discriminate against any employee or applicant for employment because of race, color, religion, sex, or national origin. The contractor will take affirmative action to ensure that applicants are employed, and that employees are treated during employment without regard to their race, color, religion, sex, or national origin. Such action shall include, but not be limited to the following: Employment, upgrading, demotion, or transfer; recruitment or recruitment advertising; layoff or termination; rates of pay or other forms of compensation; and selection for training, including apprenticeship. The contractor agrees to post in conspicuous places, available to employees and applicants for employment, notices to be provided setting forth the provisions of this nondiscrimination clause.*

11.02 *The contractor will, in all solicitations or advertisements for employees placed by or on behalf of the contractor, state that all qualified applicants will receive considerations for employment without regard to race, color, religion, sex, or national origin.*

11.03 *The contractor will send to each labor union or representative of workers with which he has a collective bargaining agreement or other contract or understanding, a notice to be provided advising the said labor union or workers' representatives of the contractor's commitments under this section, and shall post copies of the notice in conspicuous places available to employees and applicants for employment.*

11.04 *The contractor will comply with all provisions of Executive Order 11246 of September 24, 1965, and of the rules, regulations, and relevant orders of the Secretary of Labor.*

11.05 *The contractor will furnish all information and reports required by Executive Order 11246 of September 24, 1965, and by rules, regulations, and orders of the Secretary of Labor, or pursuant thereto, and will permit access to his books, records, and accounts by the administering agency and the Secretary of Labor for purposes of investigation to ascertain compliance with such rules, regulations, and orders.*

11.06 *In the event of the contractor's noncompliance with the nondiscrimination clauses of this contract or with any of the said rules, regulations, or orders, this contract may be canceled, terminated, or suspended in whole or in part and the contractor may be declared ineligible for further Government contracts or federally assisted construction contracts in accordance with procedures authorized in Executive Order 11246 of September 24, 1965, and such other sanctions as may be imposed and remedies invoked as provided in Executive Order 11246 of September 24, 1965, or by rule, regulation, or order of the Secretary of Labor, or as otherwise provided by law.*

11.07 *The contractor will include the portion of the sentence immediately preceding paragraph (1) and the provisions of paragraphs (1) through (7) in every subcontract or purchase order unless exempted by rules, regulations, or orders of the Secretary of Labor issued pursuant to section 204 of Executive Order 11246 of September 24, 1965, so that such provisions will be binding upon each subcontractor or vendor. The contractor will take such action with respect to any subcontract or purchase order as the administering agency may direct as a means of enforcing*

EJCDC® C-520, Agreement Between Owner and Contractor for Construction Contract (Stipulated Price).
Copyright © 2013 National Society of Professional Engineers, American Council of Engineering Companies, and American Society of Civil Engineers. All rights reserved.

such provisions, including sanctions for noncompliance: Provided, however, That in the event a contractor becomes involved in, or is threatened with, litigation with a subcontractor or vendor as a result of such direction by the administering agency the contractor may request the United States to enter into such litigation to protect the interests of the United States.

ARTICLE 12 – CONTRACT WORK HOURS AND SAFETY STANDARDS ACT

12.01 *Overtime Requirements: No contractor or subcontractor contracting for any part of the contract work which may require or involve the employment of laborers or mechanics shall require or permit any such laborer or mechanic in any workweek in which he or she is employed on such work to work in excess of forty hours in such workweek unless such laborer or mechanic receives compensation at a rate not less than one and one-half times the basic rate of pay for all hours worked in excess of forty hours in such workweek.*

12.02 *Violation; liability for unpaid wages; liquidated damages: In the event of any violation of the clause set forth in paragraph (1) of this section the contractor and any subcontractor responsible therefor shall be liable for the unpaid wages. In addition, such contractor and subcontractor shall be liable to the United States (in the case of work done under contract for the District of Columbia or a territory, to such District or to such territory), for liquidated damages. Such liquidated damages shall be computed with respect to each individual laborer or mechanic, including watchmen and guards, employed in violation of the clause set forth in paragraph (1) of this section, in the sum of $10 for each calendar day on which such individual was required or permitted to work in excess of the standard workweek of forty hours without payment of the overtime wages required by the clause set forth in paragraph (1) of this section.*

12.03 *Withholding for unpaid wages and liquidated damages: The State of Michigan, Michigan State Police shall upon its own action or upon written request of an authorized representative of the Department of Labor withhold or cause to be withheld, from any moneys payable on account of work performed by the contractor or subcontractor under any such contract or any other Federal contract with the same prime contractor, or any other federally-assisted contract subject to the Contract Work Hours and Safety Standards Act, which is held by the same prime contractor, such sums as may be determined to be necessary to satisfy any liabilities of such contractor or subcontractor for unpaid wages and liquidated damages as provided in the clause set forth in paragraph (2) of this section.*

12.04 *Subcontracts: The contractor or subcontractor shall insert in any subcontracts the clauses set forth in paragraph (1) through (4) of this section and also a clause requiring the subcontractors to include these clauses in any lower tier subcontracts. The prime contractor shall be responsible for compliance by any subcontractor or lower tier subcontractor with the clauses set forth in paragraphs (1) through (4) of this section.*

ARTICLE 13 – SUSPENSION AND DEBARMENT

13.01 *This contract is a covered transaction for purposes of 2 C.F.R. pt. 180 and 2 C.F.R. pt. 3000. As such the contractor is required to verify that none of the contractor, its principals (defined at 2 C.F.R. § 180.995), or its affiliates (defined at 2 C.F.R. § 180.905) are excluded (defined at 2 C.F.R. § 180.940) or disqualified (defined at 2 C.F.R. § 180.935).*

13.02 *The contractor must comply with 2 C.F.R. pt. 180, subpart C and 2 C.F.R. pt. 3000, subpart C and must include a requirement to comply with these regulations in any lower tier covered transaction it enters into.*

Copyright © 2013 National Society of Professional Engineers, American Council of Engineering Companies, and American Society of Civil Engineers. All rights reserved.

13.03 *This certification is a material representation of fact relied upon by the City of Hancock. If it is later determined that the contractor did not comply with 2 C.F.R. pt. 180, subpart C and 2 C.F.R. pt. 3000, subpart C, in addition to remedies available to the State of Michigan, Michigan State Police, the City of Hancock, the Federal Government may pursue available remedies, including but not limited to suspension and/or debarment.*

13.04 *The bidder or proposer agrees to comply with the requirements of 2 C.F.R. pt. 180, subpart C and 2 C.F.R. pt. 3000, subpart C while this offer is valid and throughout the period of any contract that may arise from this offer. The bidder or proposer further agrees to include a provision requiring such compliance in its lower tier covered transactions.*

ARTICLE 14 – BYRD ANTI-LOBBYING AMENDMENT

14.01 Contractors who apply or bid for an award of $100,000 or more shall file the required certification. Each tier certifies to the tier above that it will not and has not used Federal appropriated funds to pay any person or organization for influencing or attempting to influence an officer or employee of any agency, a member of Congress, officer or employee of Congress, or an employee of a member of Congress in connection with obtaining any Federal contract, grant, or any other award covered by 31 U.S.C. § 1352. Each tier shall also disclose any lobbying with non-Federal funds that takes place in connection with obtaining any Federal award. Such disclosures are forwarded from tier to tier up to the recipient.

14.02 A certification for Contracts, Grants, Loans and Cooperative Agreements shall be submitted with each bid exceeding $100,000.

ARTICLE 15 – PROCUREMENT OF RECOVERED MATERIALS

15.01 In the performance of this contract, the Contractor shall make maximum use of products containing recovered materials that are EPA designed items unless the product cannot be acquired.

A. Completely within a timeframe providing form compliance with contract performance schedule;

B. Meeting contract performance requirements; or

C. At a reasonable price.

ARTICLE 16 – ACCESS TO RECORDS

16.01 The following access to records requirements apply to this contract:

A. The contractor agrees to provide the State of Michigan, Michigan State Police, the City of Hancock, the FEMA Administrator, the Comptroller General of the United States, or any of their authorized representatives access to any books, documents, papers, and records of the Contractor which are directly pertinent to this contract for the purposes of making audits, examinations, excerpts, and transcriptions.

B. The Contractor agrees to permit any of the foregoing parties to reproduce by any means whatsoever or to copy excerpts and transcriptions as reasonably needed.

C. The contractor agrees to provide the FEMA Administrator or his authorized representatives access to construction or other work sites pertaining to the work being completed under the contract.

Copyright © 2013 National Society of Professional Engineers, American Council of Engineering Companies, and American Society of Civil Engineers. All rights reserved.

ARTICLE 17 – DHS SEAL, LOGO AND FLAGS

17.01 The contractor shall not use the DHS seal(s), logos, crests, or reproductions of flags or likenesses of DHS agency officials without specific FEMA pre- approval.

ARTICLE 18 – COMPLIANCE WITH FEDERAL LAW, REGULATIONS, AND EXECUTIVE ORDER

18.01 *This is an acknowledgement that FEMA financial assistance will be used to fund the contract only. The contractor will comply will all applicable federal law, regulations, executive orders, FEMA policies, procedures, and directives.*

ARTICLE 19 – NO OBLIGATION BY FEDERAL GOVERNMENT

19.01 The Federal Government is not a party to this contract and is not subject to any obligations or liabilities to the non-Federal entity, contractor, or any other party pertaining to any matter resulting from the contract.

ARTICLE 20 – PROGRAM FRAUD AND FALSE OR FRAUDULENT STATEMENTS OR RELATED ACTS

20.01 The contractor acknowledges that 31 U.S.C. Chap. 38 (Administrative Remedies for False Claims and Statements) applies to the contractor's actions pertaining to this contract.

ARTICLE 21 – MISCELLANEOUS

21.01 *Terms*

A. Terms used in this Agreement will have the meanings stated in the General Conditions and the Supplementary Conditions.

21.02 *Assignment of Contract*

A. Unless expressly agreed to elsewhere in the Contract, no assignment by a party hereto of any rights under or interests in the Contract will be binding on another party hereto without the written consent of the party sought to be bound; and, specifically but without limitation, money that may become due and money that is due may not be assigned without such consent (except to the extent that the effect of this restriction may be limited by law), and unless specifically stated to the contrary in any written consent to an assignment, no assignment will release or discharge the assignor from any duty or responsibility under the Contract Documents.

21.03 *Successors and Assigns*

A. Owner and Contractor each binds itself, its successors, assigns, and legal representatives to the other party hereto, its successors, assigns, and legal representatives in respect to all covenants, agreements, and obligations contained in the Contract Documents.

21.04 *Severability*

A. Any provision or part of the Contract Documents held to be void or unenforceable under any Law or Regulation shall be deemed stricken, and all remaining provisions shall continue to be valid and binding upon Owner and Contractor, who agree that the Contract Documents shall be reformed to replace such stricken provision or part thereof with a valid and enforceable provision that comes as close as possible to expressing the intention of the stricken provision.

EJCDC® C-520, Agreement Between Owner and Contractor for Construction Contract (Stipulated Price).
Copyright © 2013 National Society of Professional Engineers, American Council of Engineering Companies, and American Society of Civil Engineers. All rights reserved.

21.05 *Contractor's Certifications*

A. Contractor certifies that it has not engaged in corrupt, fraudulent, collusive, or coercive practices in competing for or in executing the Contract. For the purposes of this Paragraph 10.05:

1. "corrupt practice" means the offering, giving, receiving, or soliciting of any thing of value likely to influence the action of a public official in the bidding process or in the Contract execution;

2. "fraudulent practice" means an intentional misrepresentation of facts made (a) to influence the bidding process or the execution of the Contract to the detriment of Owner, (b) to establish Bid or Contract prices at artificial non-competitive levels, or (c) to deprive Owner of the benefits of free and open competition;

3. "collusive practice" means a scheme or arrangement between two or more Bidders, with or without the knowledge of Owner, a purpose of which is to establish Bid prices at artificial, non-competitive levels; and

4. "coercive practice" means harming or threatening to harm, directly or indirectly, persons or their property to influence their participation in the bidding process or affect the execution of the Contract.

21.06 *Other Provisions*

A. Owner stipulates that if the General Conditions that are made a part of this Contract are based on EJCDC® C-700, Standard General Conditions for the Construction Contract, published by the Engineers Joint Contract Documents Committee®, and if Owner is the party that has furnished said General Conditions, then Owner has plainly shown all modifications to the standard wording of such published document to the Contractor, through a process such as highlighting or "track changes" (redline/strikeout), or in the Supplementary Conditions.

IN WITNESS WHEREOF, Owner and Contractor have signed this Agreement.

This Agreement will be effective on _____ (which is the Effective Date of the Contract).

OWNER: **CITY OF HANCOCK**	CONTRACTOR:
_____	_____
By: _____	By: _____
Title: **City Manager**	Title: _____
	(If Contractor is a corporation, a partnership, or a joint venture, attach evidence of authority to sign.)
Attest: _____	Attest: _____
Title: _____	Title: _____
Address for giving notices:	Address for giving notices:

EJCDC® C-520, Agreement Between Owner and Contractor for Construction Contract (Stipulated Price).
Copyright © 2013 National Society of Professional Engineers, American Council of Engineering Companies, and American Society of Civil Engineers. All rights reserved.

City of Hancock

399 Quincy Street

Hancock, MI 49930

License No.: _____
(where applicable)

(If Owner is a corporation, attach evidence of authority to sign. If Owner is a public body, attach evidence of authority to sign and resolution or other documents authorizing execution of this Agreement.)

NOTE TO USER: Use in those states or other jurisdictions where applicable or required.

EJCDC® C-520, Agreement Between Owner and Contractor for Construction Contract (Stipulated Price).
Copyright © 2013 National Society of Professional Engineers, American Council of Engineering Companies, and American Society of Civil Engineers. All rights reserved.

EJCDC
ENGINEERS JOINT CONTRACT DOCUMENTS COMMITTEE

PERFORMANCE BOND

CONTRACTOR *(name and address)*:

SURETY *(name and address of principal place of business)*:

OWNER *(name and address)*:

CONSTRUCTION CONTRACT
Effective Date of the Agreement:
Amount:
Description *(name and location)*:

BOND
Bond Number:
Date *(not earlier than the Effective Date of the Agreement of the Construction Contract)*:
Amount:
Modifications to this Bond Form: ☐ None ☐ See Paragraph 16

Surety and Contractor, intending to be legally bound hereby, subject to the terms set forth below, do each cause this Performance Bond to be duly executed by an authorized officer, agent, or representative.

CONTRACTOR AS PRINCIPAL

_____ *(seal)*
Contractor's Name and Corporate Seal

By: _____
Signature

_____
Print Name

_____
Title

Attest: _____
Signature

_____
Title

SURETY

_____ *(seal)*
Surety's Name and Corporate Seal

By: _____
Signature *(attach power of attorney)*

_____
Print Name

_____
Title

Attest: _____
Signature

_____
Title

EJCDC® C-610, Performance Bond
Copyright © 2013 National Society of Professional Engineers, American Council of Engineering Companies, and American Society of Civil Engineers. All rights reserved.

Notes: (1) Provide supplemental execution by any additional parties, such as joint venturers. (2) Any singular reference to Contractor, Surety, Owner, or other party shall be considered plural where applicable.

Copyright © 2013 National Society of Professional Engineers, American Council of Engineering Companies, and American Society of Civil Engineers. All rights reserved.

1. The Contractor and Surety, jointly and severally, bind themselves, their heirs, executors, administrators, successors, and assigns to the Owner for the performance of the Construction Contract, which is incorporated herein by reference.

2. If the Contractor performs the Construction Contract, the Surety and the Contractor shall have no obligation under this Bond, except when applicable to participate in a conference as provided in Paragraph 3.

3. If there is no Owner Default under the Construction Contract, the Surety's obligation under this Bond shall arise after:

3.1 The Owner first provides notice to the Contractor and the Surety that the Owner is considering declaring a Contractor Default. Such notice shall indicate whether the Owner is requesting a conference among the Owner, Contractor, and Surety to discuss the Contractor's performance. If the Owner does not request a conference, the Surety may, within five (5) business days after receipt of the Owner's notice, request such a conference. If the Surety timely requests a conference, the Owner shall attend. Unless the Owner agrees otherwise, any conference requested under this Paragraph 3.1 shall be held within ten (10) business days of the Surety's receipt of the Owner's notice. If the Owner, the Contractor, and the Surety agree, the Contractor shall be allowed a reasonable time to perform the Construction Contract, but such an agreement shall not waive the Owner's right, if any, subsequently to declare a Contractor Default;

3.2 The Owner declares a Contractor Default, terminates the Construction Contract and notifies the Surety; and

3.3 The Owner has agreed to pay the Balance of the Contract Price in accordance with the terms of the Construction Contract to the Surety or to a contractor selected to perform the Construction Contract.

4. Failure on the part of the Owner to comply with the notice requirement in Paragraph 3.1 shall not constitute a failure to comply with a condition precedent to the Surety's obligations, or release the Surety from its obligations, except to the extent the Surety demonstrates actual prejudice.

5. When the Owner has satisfied the conditions of Paragraph 3, the Surety shall promptly and at the Surety's expense take one of the following actions:

5.1 Arrange for the Contractor, with the consent of the Owner, to perform and complete the Construction Contract;

5.2 Undertake to perform and complete the Construction Contract itself, through its agents or independent contractors;

5.3 Obtain bids or negotiated proposals from qualified contractors acceptable to the Owner for a contract for performance and completion of the Construction Contract, arrange for a contract to be prepared for execution by the Owner and a contractor selected with the Owners concurrence, to be secured with performance and payment bonds executed by a qualified surety equivalent to the bonds issued on the Construction Contract, and pay to the Owner the amount of damages as described in Paragraph 7 in excess of the Balance of the Contract Price incurred by the Owner as a result of the Contractor Default; or

5.4 Waive its right to perform and complete, arrange for completion, or obtain a new contractor, and with reasonable promptness under the circumstances:

5.4.1 After investigation, determine the amount for which it may be liable to the Owner and, as soon as practicable after the amount is determined, make payment to the Owner; or

5.4.2 Deny liability in whole or in part and notify the Owner, citing the reasons for denial.

6. If the Surety does not proceed as provided in Paragraph 5 with reasonable promptness, the Surety shall be deemed to be in default on this Bond seven days after receipt of an additional written notice from the Owner to the Surety demanding that the Surety perform its obligations under this Bond, and the Owner shall be entitled to enforce any remedy available to the Owner. If the Surety proceeds as provided in Paragraph 5.4, and the Owner refuses the payment or the Surety has denied liability, in whole or in part, without further notice the Owner shall be entitled to enforce any remedy available to the Owner.

7. If the Surety elects to act under Paragraph 5.1, 5.2, or 5.3, then the responsibilities of the Surety to the Owner shall not be greater than those of the Contractor under the Construction Contract, and the responsibilities of the Owner to the Surety shall not be greater than those of the Owner under the Construction Contract. Subject to the commitment by the Owner to pay the Balance of the Contract Price, the Surety is obligated, without duplication for:

7.1 the responsibilities of the Contractor for correction of defective work and completion of the Construction Contract;

7.2 additional legal, design professional, and delay costs resulting from the Contractor's Default, and resulting from the actions or failure to act of the Surety under Paragraph 5; and

7.3 liquidated damages, or if no liquidated damages are specified in the Construction Contract, actual damages caused by delayed performance or non-performance of the Contractor.

8. If the Surety elects to act under Paragraph 5.1, 5.3, or 5.4, the Surety's liability is limited to the amount of this Bond.

9. The Surety shall not be liable to the Owner or others for obligations of the Contractor that are unrelated to the Construction Contract, and the Balance of the Contract Price shall not be reduced or set off on account of any such unrelated obligations. No right of action shall accrue on this Bond to any person or entity other than

Copyright © 2013 National Society of Professional Engineers, American Council of Engineering Companies, and American Society of Civil Engineers. All rights reserved.

the Owner or its heirs, executors, administrators, successors, and assigns.

10. The Surety hereby waives notice of any change, including changes of time, to the Construction Contract or to related subcontracts, purchase orders, and other obligations.

11. Any proceeding, legal or equitable, under this Bond may be instituted in any court of competent jurisdiction in the location in which the work or part of the work is located and shall be instituted within two years after a declaration of Contractor Default or within two years after the Contractor ceased working or within two years after the Surety refuses or fails to perform its obligations under this Bond, whichever occurs first. If the provisions of this paragraph are void or prohibited by law, the minimum periods of limitations available to sureties as a defense in the jurisdiction of the suit shall be applicable.

12. Notice to the Surety, the Owner, or the Contractor shall be mailed or delivered to the address shown on the page on which their signature appears.

13. When this Bond has been furnished to comply with a statutory or other legal requirement in the location where the construction was to be performed, any provision in this Bond conflicting with said statutory or legal requirement shall be deemed deleted herefrom and provisions conforming to such statutory or other legal requirement shall be deemed incorporated herein. When so furnished, the intent is that this Bond shall be construed as a statutory bond and not as a common law bond.

14. Definitions

14.1 Balance of the Contract Price: The total amount payable by the Owner to the Contractor under the Construction Contract after all proper adjustments have been made including allowance for the Contractor for any amounts received or to be received by the Owner in settlement of insurance or other claims for damages to which the Contractor is entitled, reduced by all valid and proper payments made to or on behalf of the Contractor under the Construction Contract.

14.2 Construction Contract: The agreement between the Owner and Contractor identified on the cover page, including all Contract Documents and changes made to the agreement and the Contract Documents.

14.3 Contractor Default: Failure of the Contractor, which has not been remedied or waived, to perform or otherwise to comply with a material term of the Construction Contract.

14.4 Owner Default: Failure of the Owner, which has not been remedied or waived, to pay the Contractor as required under the Construction Contract or to perform and complete or comply with the other material terms of the Construction Contract.

14.5 Contract Documents: All the documents that comprise the agreement between the Owner and Contractor.

15. If this Bond is issued for an agreement between a contractor and subcontractor, the term Contractor in this Bond shall be deemed to be Subcontractor and the term Owner shall be deemed to be Contractor.

16. Modifications to this Bond are as follows:

Copyright © 2013 National Society of Professional Engineers, American Council of Engineering Companies, and American Society of Civil Engineers. All rights reserved.

EJCDC
ENGINEERS JOINT CONTRACT DOCUMENTS COMMITTEE

PAYMENT BOND

CONTRACTOR *(name and address)*:

SURETY *(name and address of principal place of business)*:

OWNER *(name and address)*:

CONSTRUCTION CONTRACT

Effective Date of the Agreement:
Amount:
Description *(name and location)*:

BOND

Bond Number:
Date *(not earlier than the Effective Date of the Agreement of the Construction Contract)*:
Amount:
Modifications to this Bond Form: ☐ None ☐ See Paragraph 18

Surety and Contractor, intending to be legally bound hereby, subject to the terms set forth below, do each cause this Payment Bond to be duly executed by an authorized officer, agent, or representative.

CONTRACTOR AS PRINCIPAL

_____ *(seal)*
Contractor's Name and Corporate Seal

By: _____
Signature

_____
Print Name

_____
Title

Attest: _____
Signature

_____
Title

SURETY

_____ *(seal)*
Surety's Name and Corporate Seal

By: _____
Signature *(attach power of attorney)*

_____
Print Name

_____
Title

Attest: _____
Signature

_____
Title

Notes: (1) Provide supplemental execution by any additional parties, such as joint venturers. (2) Any singular reference to Contractor, Surety, Owner, or other party shall be considered plural where applicable.

Copyright © 2013 National Society of Professional Engineers, American Council of Engineering Companies, and American Society of Civil Engineers. All rights reserved.

1. The Contractor and Surety, jointly and severally, bind themselves, their heirs, executors, administrators, successors, and assigns to the Owner to pay for labor, materials, and equipment furnished for use in the performance of the Construction Contract, which is incorporated herein by reference, subject to the following terms.

2. If the Contractor promptly makes payment of all sums due to Claimants, and defends, indemnifies, and holds harmless the Owner from claims, demands, liens, or suits by any person or entity seeking payment for labor, materials, or equipment furnished for use in the performance of the Construction Contract, then the Surety and the Contractor shall have no obligation under this Bond.

3. If there is no Owner Default under the Construction Contract, the Surety's obligation to the Owner under this Bond shall arise after the Owner has promptly notified the Contractor and the Surety (at the address described in Paragraph 13) of claims, demands, liens, or suits against the Owner or the Owner's property by any person or entity seeking payment for labor, materials, or equipment furnished for use in the performance of the Construction Contract, and tendered defense of such claims, demands, liens, or suits to the Contractor and the Surety.

4. When the Owner has satisfied the conditions in Paragraph 3, the Surety shall promptly and at the Surety's expense defend, indemnify, and hold harmless the Owner against a duly tendered claim, demand, lien, or suit.

5. The Surety's obligations to a Claimant under this Bond shall arise after the following:

   5.1 Claimants who do not have a direct contract with the Contractor,

      5.1.1 have furnished a written notice of non-payment to the Contractor, stating with substantial accuracy the amount claimed and the name of the party to whom the materials were, or equipment was, furnished or supplied or for whom the labor was done or performed, within ninety (90) days after having last performed labor or last furnished materials or equipment included in the Claim; and

      5.1.2 have sent a Claim to the Surety (at the address described in Paragraph 13).

   5.2 Claimants who are employed by or have a direct contract with the Contractor have sent a Claim to the Surety (at the address described in Paragraph 13).

6. If a notice of non-payment required by Paragraph 5.1.1 is given by the Owner to the Contractor, that is sufficient to satisfy a Claimant's obligation to furnish a written notice of non-payment under Paragraph 5.1.1.

7. When a Claimant has satisfied the conditions of Paragraph 5.1 or 5.2, whichever is applicable, the Surety shall promptly and at the Surety's expense take the following actions:

   7.1 Send an answer to the Claimant, with a copy to the Owner, within sixty (60) days after receipt of the Claim, stating the amounts that are undisputed and the basis for challenging any amounts that are disputed; and

   7.2 Pay or arrange for payment of any undisputed amounts.

   7.3 The Surety's failure to discharge its obligations under Paragraph 7.1 or 7.2 shall not be deemed to constitute a waiver of defenses the Surety or Contractor may have or acquire as to a Claim, except as to undisputed amounts for which the Surety and Claimant have reached agreement. If, however, the Surety fails to discharge its obligations under Paragraph 7.1 or 7.2, the Surety shall indemnify the Claimant for the reasonable attorney's fees the Claimant incurs thereafter to recover any sums found to be due and owing to the Claimant.

8. The Surety's total obligation shall not exceed the amount of this Bond, plus the amount of reasonable attorney's fees provided under Paragraph 7.3, and the amount of this Bond shall be credited for any payments made in good faith by the Surety.

9. Amounts owed by the Owner to the Contractor under the Construction Contract shall be used for the performance of the Construction Contract and to satisfy claims, if any, under any construction performance bond. By the Contractor furnishing and the Owner accepting this Bond, they agree that all funds earned by the Contractor in the performance of the Construction Contract are dedicated to satisfy obligations of the Contractor and Surety under this Bond, subject to the Owner's priority to use the funds for the completion of the work.

10. The Surety shall not be liable to the Owner, Claimants, or others for obligations of the Contractor that are unrelated to the Construction Contract. The Owner shall not be liable for the payment of any costs or expenses of any Claimant under this Bond, and shall have under this Bond no obligation to make payments to or give notice on behalf of Claimants, or otherwise have any obligations to Claimants under this Bond.

11. The Surety hereby waives notice of any change, including

Copyright © 2013 National Society of Professional Engineers, American Council of Engineering Companies, and American Society of Civil Engineers. All rights reserved.

changes of time, to the Construction Contract or to related subcontracts, purchase orders, and other obligations.

12. No suit or action shall be commenced by a Claimant under this Bond other than in a court of competent jurisdiction in the state in which the project that is the subject of the Construction Contract is located or after the expiration of one year from the date (1) on which the Claimant sent a Claim to the Surety pursuant to Paragraph 5.1.2 or 5.2, or (2) on which the last labor or service was performed by anyone or the last materials or equipment were furnished by anyone under the Construction Contract, whichever of (1) or (2) first occurs. If the provisions of this paragraph are void or prohibited by law, the minimum period of limitation available to sureties as a defense in the jurisdiction of the suit shall be applicable.

13. Notice and Claims to the Surety, the Owner, or the Contractor shall be mailed or delivered to the address shown on the page on which their signature appears. Actual receipt of notice or Claims, however accomplished, shall be sufficient compliance as of the date received.

14. When this Bond has been furnished to comply with a statutory or other legal requirement in the location where the construction was to be performed, any provision in this Bond conflicting with said statutory or legal requirement shall be deemed deleted herefrom and provisions conforming to such statutory or other legal requirement shall be deemed incorporated herein. When so furnished, the intent is that this Bond shall be construed as a statutory bond and not as a common law bond.

15. Upon requests by any person or entity appearing to be a potential beneficiary of this Bond, the Contractor and Owner shall promptly furnish a copy of this Bond or shall permit a copy to be made.

16. **Definitions**

16.1 **Claim:** A written statement by the Claimant including at a minimum:

1. The name of the Claimant;
2. The name of the person for whom the labor was done, or materials or equipment furnished;
3. A copy of the agreement or purchase order pursuant to which labor, materials, or equipment was furnished for use in the performance of the Construction Contract;
4. A brief description of the labor, materials, or equipment furnished;
5. The date on which the Claimant last performed labor or last furnished materials or equipment for use in the performance of the Construction Contract;
6. The total amount earned by the Claimant for labor, materials, or equipment furnished as of the date of the Claim;
7. The total amount of previous payments received by the Claimant; and
8. The total amount due and unpaid to the Claimant for labor, materials, or equipment furnished as of the date of the Claim.

16.2 **Claimant:** An individual or entity having a direct contract with the Contractor or with a subcontractor of the Contractor to furnish labor, materials, or equipment for use in the performance of the Construction Contract. The term Claimant also includes any individual or entity that has rightfully asserted a claim under an applicable mechanic's lien or similar statute against the real property upon which the Project is located. The intent of this Bond shall be to include without limitation in the terms of "labor, materials, or equipment" that part of the water, gas, power, light, heat, oil, gasoline, telephone service, or rental equipment used in the Construction Contract, architectural and engineering services required for performance of the work of the Contractor and the Contractor's subcontractors, and all other items for which a mechanic's lien may be asserted in the jurisdiction where the labor, materials, or equipment were furnished.

16.3 **Construction Contract:** The agreement between the Owner and Contractor identified on the cover page, including all Contract Documents and all changes made to the agreement and the Contract Documents.

16.4 **Owner Default**: Failure of the Owner, which has not been remedied or waived, to pay the Contractor as required under the Construction Contract or to perform and complete or comply with the other material terms of the Construction Contract.

16.5 **Contract Documents:** All the documents that comprise the agreement between the Owner and Contractor.

17. If this Bond is issued for an agreement between a contractor and subcontractor, the term Contractor in this Bond shall be deemed to be Subcontractor and the term Owner shall be deemed to be Contractor.

18. Modifications to this Bond are as follows:

Copyright © 2013 National Society of Professional Engineers, American Council of Engineering Companies, and American Society of Civil Engineers. All rights reserved.

EJCDC
ENGINEERS JOINT CONTRACT DOCUMENTS COMMITTEE

NOTICE TO PROCEED

Owner:	City of Hancock	Owner's Contract No.:	PW 157
Contractor:		Contractor's Project No.:	
Engineer:	OHM Advisors	Engineer's Project No.:	7030-18-0030
Project:	Storm Sewer Repairs Phase 2	Contract Name:	Storm Sewer Repairs Phase 2
		Effective Date of Contract:	

TO CONTRACTOR:

Owner hereby notifies Contractor that the Contract Times under the above Contract will commence to run on _____, 2021. *[see Paragraph 4.01 of the General Conditions]*

On that date, Contractor shall start performing its obligations under the Contract Documents. No Work shall be done at the Site prior to such date. In accordance with the Agreement, the date of Substantial Completion is **_____, 2021**, and the date of readiness for final payment is **_____, 2021.**

Before starting any Work at the Site, Contractor must comply with the following:

Owner**:** City of Hancock

Authorized Signature

By:

Title:

Date Issued:

Copy: Engineer

STANDARD GENERAL CONDITIONS OF THE CONSTRUCTION CONTRACT

TABLE OF CONTENTS

Page

Article 1 – Definitions and Terminology 88

1.01 Defined Terms 88

1.02 Terminology 92

Article 2 – Preliminary Matters 93

2.01 Delivery of Bonds and Evidence of Insurance 93

2.02 Copies of Documents 93

2.03 Before Starting Construction 93

2.04 Preconstruction Conference; Designation of Authorized Representatives 94

2.05 Initial Acceptance of Schedules 94

2.06 Electronic Transmittals 94

Article 3 – Documents: Intent, Requirements, Reuse 95

3.01 Intent 95

3.02 Reference Standards 95

3.03 Reporting and Resolving Discrepancies 96

3.04 Requirements of the Contract Documents 96

3.05 Reuse of Documents 97

Article 4 – Commencement and Progress of the Work 97

4.01 Commencement of Contract Times; Notice to Proceed 97

4.02 Starting the Work 97

4.03 Reference Points 97

4.04 Progress Schedule 98

4.05 Delays in Contractor's Progress 98

Article 5 – Availability of Lands; Subsurface and Physical Conditions; Hazardous Environmental Conditions 99

5.01 Availability of Lands 99

5.02 Use of Site and Other Areas 99

5.03 Subsurface and Physical Conditions 100

5.04 Differing Subsurface or Physical Conditions 100

5.05 Underground Facilities 102

EJCDC® C-700, Standard General Conditions of the Construction Contract.
Copyright © 2013 National Society of Professional Engineers, American Council of Engineering Companies, and American Society of Civil Engineers. All rights reserved.

5.06 Hazardous Environmental Conditions at Site 103
Article 6 – Bonds and Insurance 105
6.01 Performance, Payment, and Other Bonds 105
6.02 Insurance—General Provisions 105
6.03 Contractor's Insurance 106
6.04 Owner's Liability Insurance 110
6.05 Property Insurance 110
6.06 Waiver of Rights 112
6.07 Receipt and Application of Property Insurance Proceeds 113
Article 7 – Contractor's Responsibilities 114
7.01 Supervision and Superintendence 114
7.02 Labor; Working Hours 114
7.03 Services, Materials, and Equipment 114
7.04 "Or Equals" 114
7.05 Substitutes 115
7.06 Concerning Subcontractors, Suppliers, and Others 117
7.07 Patent Fees and Royalties 118
7.08 Permits 119
7.09 Taxes 119
7.10 Laws and Regulations 119
7.11 Record Documents 120
7.12 Safety and Protection 120
7.13 Safety Representative 121
7.14 Hazard Communication Programs 121
7.15 Emergencies 121
7.16 Shop Drawings, Samples, and Other Submittals 122
7.17 Contractor's General Warranty and Guarantee 124
7.18 Indemnification 124
7.19 Delegation of Professional Design Services 125
Article 8 – Other Work at the Site 126
8.01 Other Work 126
8.02 Coordination 126
8.03 Legal Relationships 127

EJCDC® C-700, Standard General Conditions of the Construction Contract.
Copyright © 2013 National Society of Professional Engineers, American Council of Engineering Companies, and American Society of Civil Engineers. All rights reserved.

Article 9 – Owner's Responsibilities 128
9.01 Communications to Contractor 128
9.02 Replacement of Engineer 128
9.03 Furnish Data 128
9.04 Pay When Due 128
9.05 Lands and Easements; Reports, Tests, and Drawings 128
9.06 Insurance 128
9.07 Change Orders 128
9.08 Inspections, Tests, and Approvals 128
9.09 Limitations on Owner's Responsibilities 128
9.10 Undisclosed Hazardous Environmental Condition 128
9.11 Evidence of Financial Arrangements 129
9.12 Safety Programs 129
Article 10 – Engineer's Status During Construction 129
10.01 Owner's Representative 129
10.02 Visits to Site 129
10.03 Project Representative 129
10.04 Rejecting Defective Work 130
10.05 Shop Drawings, Change Orders and Payments 130
10.06 Determinations for Unit Price Work 130
10.07 Decisions on Requirements of Contract Documents and Acceptability of Work 130
10.08 Limitations on Engineer's Authority and Responsibilities 130
10.09 Compliance with Safety Program 131
Article 11 – Amending the Contract Documents; Changes in the Work 131
11.01 Amending and Supplementing Contract Documents 131
11.02 Owner-Authorized Changes in the Work 132
11.03 Unauthorized Changes in the Work 132
11.04 Change of Contract Price 132
11.05 Change of Contract Times 133
11.06 Change Proposals 133
11.07 Execution of Change Orders 134
11.08 Notification to Surety 134
Article 12 – Claims 135

EJCDC® C-700, Standard General Conditions of the Construction Contract.
Copyright © 2013 National Society of Professional Engineers, American Council of Engineering Companies, and American Society of Civil Engineers. All rights reserved.

12.01 Claims 135
Article 13 – Cost of the Work; Allowances; Unit Price Work 136
13.01 Cost of the Work 136
13.02 Allowances 139
13.03 Unit Price Work 139
Article 14 – Tests and Inspections; Correction, Removal or Acceptance of Defective Work 140
14.01 Access to Work 140
14.02 Tests, Inspections, and Approvals 140
14.03 Defective Work 141
14.04 Acceptance of Defective Work 141
14.05 Uncovering Work 142
14.06 Owner May Stop the Work 142
14.07 Owner May Correct Defective Work 142
Article 15 – Payments to Contractor; Set-Offs; Completion; Correction Period 143
15.01 Progress Payments 143
15.02 Contractor's Warranty of Title 146
15.03 Substantial Completion 146
15.04 Partial Use or Occupancy 147
15.05 Final Inspection 147
15.06 Final Payment 148
15.07 Waiver of Claims 149
15.08 Correction Period 149
Article 16 – Suspension of Work and Termination 150
16.01 Owner May Suspend Work 150
16.02 Owner May Terminate for Cause 150
16.03 Owner May Terminate For Convenience 151
16.04 Contractor May Stop Work or Terminate 151
Article 17 – Final Resolution of Disputes 152
17.01 Methods and Procedures 152
17.02 Arbitration 152
17.03 Attorney's Fees 153
Article 18 – Miscellaneous 153
18.01 Giving Notice 153

EJCDC® C-700, Standard General Conditions of the Construction Contract.
Copyright © 2013 National Society of Professional Engineers, American Council of Engineering Companies, and American Society of Civil Engineers. All rights reserved.

18.02 Computation of Times 153
18.03 Cumulative Remedies 153
18.04 Limitation of Damages 154
18.05 No Waiver 154
18.06 Survival of Obligations 154
18.07 Controlling Law 154
18.08 Headings 154

EJCDC® C-700, Standard General Conditions of the Construction Contract.
Copyright © 2013 National Society of Professional Engineers, American Council of Engineering Companies, and American Society of Civil Engineers. All rights reserved.

ARTICLE 1 – DEFINITIONS AND TERMINOLOGY

1.01 *Defined Terms*

A. Wherever used in the Bidding Requirements or Contract Documents, a term printed with initial capital letters, including the term's singular and plural forms, will have the meaning indicated in the definitions below. In addition to terms specifically defined, terms with initial capital letters in the Contract Documents include references to identified articles and paragraphs, and the titles of other documents or forms.

1. *Addenda*—Written or graphic instruments issued prior to the opening of Bids which clarify, correct, or change the Bidding Requirements or the proposed Contract Documents.

2. *Agreement*—The written instrument, executed by Owner and Contractor, that sets forth the Contract Price and Contract Times, identifies the parties and the Engineer, and designates the specific items that are Contract Documents.

3. *Application for Payment*—The form acceptable to Engineer which is to be used by Contractor during the course of the Work in requesting progress or final payments and which is to be accompanied by such supporting documentation as is required by the Contract Documents.

4. *Bid*—The offer of a Bidder submitted on the prescribed form setting forth the prices for the Work to be performed.

5. *Bidder*—An individual or entity that submits a Bid to Owner.

6. *Bidding Documents*—The Bidding Requirements, the proposed Contract Documents, and all Addenda.

7. *Bidding Requirements*—The advertisement or invitation to bid, Instructions to Bidders, Bid Bond or other Bid security, if any, the Bid Form, and the Bid with any attachments.

8. *Change Order*—A document which is signed by Contractor and Owner and authorizes an addition, deletion, or revision in the Work or an adjustment in the Contract Price or the Contract Times, or other revision to the Contract, issued on or after the Effective Date of the Contract.

9. *Change Proposal*—A written request by Contractor, duly submitted in compliance with the procedural requirements set forth herein, seeking an adjustment in Contract Price or Contract Times, or both; contesting an initial decision by Engineer concerning the requirements of the Contract Documents or the acceptability of Work under the Contract Documents; challenging a set-off against payments due; or seeking other relief with respect to the terms of the Contract.

10. *Claim*—(a) A demand or assertion by Owner directly to Contractor, duly submitted in compliance with the procedural requirements set forth herein: seeking an adjustment of Contract Price or Contract Times, or both; contesting an initial decision by Engineer concerning the requirements of the Contract Documents or the acceptability of Work under the Contract Documents; contesting Engineer's decision regarding a Change Proposal; seeking resolution of a contractual issue that Engineer has declined to address; or seeking other relief with respect to the terms of the Contract; or (b) a demand or assertion by Contractor directly to Owner, duly submitted in compliance with the procedural requirements set forth herein, contesting Engineer's decision regarding a Change Proposal; or seeking resolution of a contractual issue that Engineer

EJCDC® C-700, Standard General Conditions of the Construction Contract.
Copyright © 2013 National Society of Professional Engineers, American Council of Engineering Companies, and American Society of Civil Engineers. All rights reserved.

has declined to address. A demand for money or services by a third party is not a Claim.

11. *Constituent of Concern*—Asbestos, petroleum, radioactive materials, polychlorinated biphenyls (PCBs), hazardous waste, and any substance, product, waste, or other material of any nature whatsoever that is or becomes listed, regulated, or addressed pursuant to (a) the Comprehensive Environmental Response, Compensation and Liability Act, 42 U.S.C. §§9601 et seq. ("CERCLA"); (b) the Hazardous Materials Transportation Act, 49 U.S.C. §§5501 et seq.; (c) the Resource Conservation and Recovery Act, 42 U.S.C. §§6901 et seq. ("RCRA"); (d) the Toxic Substances Control Act, 15 U.S.C. §§2601 et seq.; (e) the Clean Water Act, 33 U.S.C. §§1251 et seq.; (f) the Clean Air Act, 42 U.S.C. §§7401 et seq.; or (g) any other federal, state, or local statute, law, rule, regulation, ordinance, resolution, code, order, or decree regulating, relating to, or imposing liability or standards of conduct concerning, any hazardous, toxic, or dangerous waste, substance, or material.

12. *Contract*—The entire and integrated written contract between the Owner and Contractor concerning the Work.

13. *Contract Documents*—Those items so designated in the Agreement, and which together comprise the Contract.

14. *Contract Price*—The money that Owner has agreed to pay Contractor for completion of the Work in accordance with the Contract Documents.

15. *Contract Times*—The number of days or the dates by which Contractor shall: (a) achieve Milestones, if any; (b) achieve Substantial Completion; and (c) complete the Work.

16. *Contractor*—The individual or entity with which Owner has contracted for performance of the Work.

17. *Cost of the Work*—See Paragraph 13.01 for definition.

18. *Drawings*—The part of the Contract that graphically shows the scope, extent, and character of the Work to be performed by Contractor.

19. *Effective Date of the Contract*—The date, indicated in the Agreement, on which the Contract becomes effective.

20. *Engineer*—The individual or entity named as such in the Agreement.

21. *Field Order*—A written order issued by Engineer which requires minor changes in the Work but does not change the Contract Price or the Contract Times.

22. *Hazardous Environmental Condition*—The presence at the Site of Constituents of Concern in such quantities or circumstances that may present a danger to persons or property exposed thereto. The presence at the Site of materials that are necessary for the execution of the Work, or that are to be incorporated in the Work, and that are controlled and contained pursuant to industry practices, Laws and Regulations, and the requirements of the Contract, does not establish a Hazardous Environmental Condition.

23. *Laws and Regulations; Laws or Regulations*—Any and all applicable laws, statutes, rules, regulations, ordinances, codes, and orders of any and all governmental bodies, agencies, authorities, and courts having jurisdiction.

Copyright © 2013 National Society of Professional Engineers, American Council of Engineering Companies, and American Society of Civil Engineers. All rights reserved.

24. *Liens*—Charges, security interests, or encumbrances upon Contract-related funds, real property, or personal property.

25. *Milestone*—A principal event in the performance of the Work that the Contract requires Contractor to achieve by an intermediate completion date or by a time prior to Substantial Completion of all the Work.

26. *Notice of Award*—The written notice by Owner to a Bidder of Owner's acceptance of the Bid.

27. *Notice to Proceed*—A written notice by Owner to Contractor fixing the date on which the Contract Times will commence to run and on which Contractor shall start to perform the Work.

28. *Owner*—The individual or entity with which Contractor has contracted regarding the Work, and which has agreed to pay Contractor for the performance of the Work, pursuant to the terms of the Contract.

29. *Progress Schedule*—A schedule, prepared and maintained by Contractor, describing the sequence and duration of the activities comprising the Contractor's plan to accomplish the Work within the Contract Times.

30. *Project*—The total undertaking to be accomplished for Owner by engineers, contractors, and others, including planning, study, design, construction, testing, commissioning, and start-up, and of which the Work to be performed under the Contract Documents is a part.

31. *Project Manual*—The written documents prepared for, or made available for, procuring and constructing the Work, including but not limited to the Bidding Documents or other construction procurement documents, geotechnical and existing conditions information, the Agreement, bond forms, General Conditions, Supplementary Conditions, and Specifications. The contents of the Project Manual may be bound in one or more volumes.

32. *Resident Project Representative*—The authorized representative of Engineer assigned to assist Engineer at the Site. As used herein, the term Resident Project Representative or "RPR" includes any assistants or field staff of Resident Project Representative.

33. *Samples*—Physical examples of materials, equipment, or workmanship that are representative of some portion of the Work and that establish the standards by which such portion of the Work will be judged.

34. *Schedule of Submittals*—A schedule, prepared and maintained by Contractor, of required submittals and the time requirements for Engineer's review of the submittals and the performance of related construction activities.

~~35. *Schedule of Values*—A schedule, prepared and maintained by Contractor, allocating portions of the Contract Price to various portions of the Work and used as the basis for reviewing Contractor's Applications for Payment.~~

36. *Shop Drawings*—All drawings, diagrams, illustrations, schedules, and other data or information that are specifically prepared or assembled by or for Contractor and submitted by Contractor to illustrate some portion of the Work. Shop Drawings, whether approved or not, are not Drawings and are not Contract Documents.

Copyright © 2013 National Society of Professional Engineers, American Council of Engineering Companies, and American Society of Civil Engineers. All rights reserved.

37. *Site*—Lands or areas indicated in the Contract Documents as being furnished by Owner upon which the Work is to be performed, including rights-of-way and easements, and such other lands furnished by Owner which are designated for the use of Contractor.

38. *Specifications*—The part of the Contract that consists of written requirements for materials, equipment, systems, standards, and workmanship as applied to the Work, and certain administrative requirements and procedural matters applicable to the Work.

39. *Subcontractor*—An individual or entity having a direct contract with Contractor or with any other Subcontractor for the performance of a part of the Work.

40. *Substantial Completion*—The time at which the Work (or a specified part thereof) has progressed to the point where, in the opinion of Engineer, the Work (or a specified part thereof) is sufficiently complete, in accordance with the Contract Documents, so that the Work (or a specified part thereof) can be utilized for the purposes for which it is intended. The terms "substantially complete" and "substantially completed" as applied to all or part of the Work refer to Substantial Completion thereof.

41. *Successful Bidder*—The Bidder whose Bid the Owner accepts, and to which the Owner makes an award of contract, subject to stated conditions.

42. *Supplementary Conditions*—The part of the Contract that amends or supplements these General Conditions.

43. *Supplier*—A manufacturer, fabricator, supplier, distributor, materialman, or vendor having a direct contract with Contractor or with any Subcontractor to furnish materials or equipment to be incorporated in the Work by Contractor or a Subcontractor.

44. *Technical Data*—Those items expressly identified as Technical Data in the Supplementary Conditions, with respect to either (a) subsurface conditions at the Site, or physical conditions relating to existing surface or subsurface structures at the Site (except Underground Facilities) or (b) Hazardous Environmental Conditions at the Site. If no such express identifications of Technical Data have been made with respect to conditions at the Site, then the data contained in boring logs, recorded measurements of subsurface water levels, laboratory test results, and other factual, objective information regarding conditions at the Site that are set forth in any geotechnical or environmental report prepared for the Project and made available to Contractor are hereby defined as Technical Data with respect to conditions at the Site under Paragraphs 5.03, 5.04, and 5.06.

45. *Underground Facilities*—All underground pipelines, conduits, ducts, cables, wires, manholes, vaults, tanks, tunnels, or other such facilities or attachments, and any encasements containing such facilities, including but not limited to those that convey electricity, gases, steam, liquid petroleum products, telephone or other communications, fiber optic transmissions, cable television, water, wastewater, storm water, other liquids or chemicals, or traffic or other control systems.

46. *Unit Price Work*—Work to be paid for on the basis of unit prices.

47. *Work*—The entire construction or the various separately identifiable parts thereof required to be provided under the Contract Documents. Work includes and is the result of performing or providing all labor, services, and documentation necessary to produce such construction; furnishing, installing, and incorporating all materials and equipment into such construction; and may include related services such as testing, start-up, and commissioning, all as required by the Contract Documents.

Copyright © 2013 National Society of Professional Engineers, American Council of Engineering Companies, and American Society of Civil Engineers. All rights reserved.

48. *Work Change Directive*—A written directive to Contractor issued on or after the Effective Date of the Contract, signed by Owner and recommended by Engineer, ordering an addition, deletion, or revision in the Work.

1.02 *Terminology*

A. The words and terms discussed in the following paragraphs are not defined but, when used in the Bidding Requirements or Contract Documents, have the indicated meaning.

B. *Intent of Certain Terms or Adjectives*:

1. The Contract Documents include the terms "as allowed," "as approved," "as ordered," "as directed" or terms of like effect or import to authorize an exercise of professional judgment by Engineer. In addition, the adjectives "reasonable," "suitable," "acceptable," "proper," "satisfactory," or adjectives of like effect or import are used to describe an action or determination of Engineer as to the Work. It is intended that such exercise of professional judgment, action, or determination will be solely to evaluate, in general, the Work for compliance with the information in the Contract Documents and with the design concept of the Project as a functioning whole as shown or indicated in the Contract Documents (unless there is a specific statement indicating otherwise). The use of any such term or adjective is not intended to and shall not be effective to assign to Engineer any duty or authority to supervise or direct the performance of the Work, or any duty or authority to undertake responsibility contrary to the provisions of Article 10 or any other provision of the Contract Documents.

C. *Day*:

1. The word "day" means a calendar day of 24 hours measured from midnight to the next midnight.

D. *Defective*:

1. The word "defective," when modifying the word "Work," refers to Work that is unsatisfactory, faulty, or deficient in that it:

a. does not conform to the Contract Documents; or

b. does not meet the requirements of any applicable inspection, reference standard, test, or approval referred to in the Contract Documents; or

c. has been damaged prior to Engineer's recommendation of final payment (unless responsibility for the protection thereof has been assumed by Owner at Substantial Completion in accordance with Paragraph 15.03 or 15.04).

E. *Furnish, Install, Perform, Provide*:

1. The word "furnish," when used in connection with services, materials, or equipment, shall mean to supply and deliver said services, materials, or equipment to the Site (or some other specified location) ready for use or installation and in usable or operable condition.

2. The word "install," when used in connection with services, materials, or equipment, shall mean to put into use or place in final position said services, materials, or equipment complete and ready for intended use.

Copyright © 2013 National Society of Professional Engineers, American Council of Engineering Companies, and American Society of Civil Engineers. All rights reserved.

3. The words “perform” or “provide,” when used in connection with services, materials, or equipment, shall mean to furnish and install said services, materials, or equipment complete and ready for intended use.

4. If the Contract Documents establish an obligation of Contractor with respect to specific services, materials, or equipment, but do not expressly use any of the four words “furnish,” “install,” “perform,” or “provide,” then Contractor shall furnish and install said services, materials, or equipment complete and ready for intended use.

F. Unless stated otherwise in the Contract Documents, words or phrases that have a well-known technical or construction industry or trade meaning are used in the Contract Documents in accordance with such recognized meaning.

ARTICLE 2 – PRELIMINARY MATTERS

2.01 *Delivery of Bonds and Evidence of Insurance*

A. *Bonds*: When Contractor delivers the executed counterparts of the Agreement to Owner, Contractor shall also deliver to Owner such bonds as Contractor may be required to furnish.

B. Evidence of Contractor’s Insurance: When Contractor delivers the executed counterparts of the Agreement to Owner, Contractor shall also deliver to Owner copies of the policies of insurance (including all endorsements, and identification of applicable self-insured retentions and deductibles) required to be provided by Contractor in Article 6. Contractor may block out (redact) any confidential premium or pricing information contained in any policy or endorsement furnished under this provision.

C. Evidence of Owner’s Insurance: After receipt from Contractor of the executed counterparts of the Agreement and all required bonds and insurance documentation, Owner shall promptly deliver to Contractor copies of the policies of insurance to be provided by Owner under Article 6 (if any). Owner may block out (redact) any confidential premium or pricing information contained in any policy or endorsement furnished under this provision.

2.02 *Copies of Documents*

A. Owner shall furnish to Contractor [___1__] copies of conformed Contract Documents incorporating and integrating all Addenda and any amendments negotiated prior to the Effective Date of the Contract (including one fully executed counterpart of the Agreement), and one copy in electronic portable document format (PDF). Additional printed copies of the conformed Contract Documents will be furnished upon request at the cost of reproduction.

B. Owner shall maintain and safeguard at least one original printed record version of the Contract, including Drawings and Specifications signed and sealed by Engineer and other design professionals. Owner shall make such original printed record version of the Contract available to Contractor for review. Owner may delegate the responsibilities under this provision to Engineer.

2.03 *Before Starting Construction*

A. *Preliminary Schedules*: Within 10 days after the Effective Date of the Contract (or as otherwise specifically required by the Contract Documents), Contractor shall submit to Engineer for timely review:

Copyright © 2013 National Society of Professional Engineers, American Council of Engineering Companies, and American Society of Civil Engineers. All rights reserved.

1. a preliminary Progress Schedule indicating the times (numbers of days or dates) for starting and completing the various stages of the Work, including any Milestones specified in the Contract;

2. a preliminary Schedule of Submittals; ~~and~~

~~3. a preliminary Schedule of Values for all of the Work which includes quantities and prices of items which when added together equal the Contract Price and subdivides the Work into component parts in sufficient detail to serve as the basis for progress payments during performance of the Work. Such prices will include an appropriate amount of overhead and profit applicable to each item of Work.~~

2.04 *Preconstruction Conference; Designation of Authorized Representatives*

A. Before any Work at the Site is started, a conference attended by Owner, Contractor, Engineer, and others as appropriate will be held to establish a working understanding among the parties as to the Work and to discuss the schedules referred to in Paragraph 2.03.A, procedures for handling Shop Drawings, Samples, and other submittals, processing Applications for Payment, electronic or digital transmittals, and maintaining required records.

B. At this conference Owner and Contractor each shall designate, in writing, a specific individual to act as its authorized representative with respect to the services and responsibilities under the Contract. Such individuals shall have the authority to transmit and receive information, render decisions relative to the Contract, and otherwise act on behalf of each respective party.

2.05 *Initial Acceptance of Schedules*

A. At least 10 days before submission of the first Application for Payment a conference, attended by Contractor, Engineer, and others as appropriate, will be held to review for acceptability to Engineer as provided below the schedules submitted in accordance with Paragraph 2.03.A. Contractor shall have an additional 10 days to make corrections and adjustments and to complete and resubmit the schedules. No progress payment shall be made to Contractor until acceptable schedules are submitted to Engineer.

1. The Progress Schedule will be acceptable to Engineer if it provides an orderly progression of the Work to completion within the Contract Times. Such acceptance will not impose on Engineer responsibility for the Progress Schedule, for sequencing, scheduling, or progress of the Work, nor interfere with or relieve Contractor from Contractor's full responsibility therefor.

2. Contractor's Schedule of Submittals will be acceptable to Engineer if it provides a workable arrangement for reviewing and processing the required submittals.

~~3. Contractor's Schedule of Values will be acceptable to Engineer as to form and substance if it provides a reasonable allocation of the Contract Price to the component parts of the Work.~~

2.06 *Electronic Transmittals*

A. Except as otherwise stated elsewhere in the Contract, the Owner, Engineer, and Contractor may transmit, and shall accept, Project-related correspondence, text, data, documents, drawings, information, and graphics, including but not limited to Shop Drawings and other submittals, in electronic media or digital format, either directly, or through access to a secure Project website.

Copyright © 2013 National Society of Professional Engineers, American Council of Engineering Companies, and American Society of Civil Engineers. All rights reserved.

B. If the Contract does not establish protocols for electronic or digital transmittals, then Owner, Engineer, and Contractor shall jointly develop such protocols.

C. When transmitting items in electronic media or digital format, the transmitting party makes no representations as to long term compatibility, usability, or readability of the items resulting from the recipient's use of software application packages, operating systems, or computer hardware differing from those used in the drafting or transmittal of the items, or from those established in applicable transmittal protocols.

ARTICLE 3 – DOCUMENTS: INTENT, REQUIREMENTS, REUSE

3.01 *Intent*

A. The Contract Documents are complementary; what is required by one is as binding as if required by all.

B. It is the intent of the Contract Documents to describe a functionally complete project (or part thereof) to be constructed in accordance with the Contract Documents.

C. Unless otherwise stated in the Contract Documents, if there is a discrepancy between the electronic or digital versions of the Contract Documents (including any printed copies derived from such electronic or digital versions) and the printed record version, the printed record version shall govern.

D. The Contract supersedes prior negotiations, representations, and agreements, whether written or oral.

E. Engineer will issue clarifications and interpretations of the Contract Documents as provided herein.

3.02 *Reference Standards*

A. Standards Specifications, Codes, Laws and Regulations

1. Reference in the Contract Documents to standard specifications, manuals, reference standards, or codes of any technical society, organization, or association, or to Laws or Regulations, whether such reference be specific or by implication, shall mean the standard specification, manual, reference standard, code, or Laws or Regulations in effect at the time of opening of Bids (or on the Effective Date of the Contract if there were no Bids), except as may be otherwise specifically stated in the Contract Documents.

2. No provision of any such standard specification, manual, reference standard, or code, or any instruction of a Supplier, shall be effective to change the duties or responsibilities of Owner, Contractor, or Engineer, or any of their subcontractors, consultants, agents, or employees, from those set forth in the part of the Contract Documents prepared by or for Engineer. No such provision or instruction shall be effective to assign to Owner, Engineer, or any of their officers, directors, members, partners, employees, agents, consultants, or subcontractors, any duty or authority to supervise or direct the performance of the Work or any duty or authority to undertake responsibility inconsistent with the provisions of the part of the Contract Documents prepared by or for Engineer.

Copyright © 2013 National Society of Professional Engineers, American Council of Engineering Companies, and American Society of Civil Engineers. All rights reserved.

3.03 *Reporting and Resolving Discrepancies*

A. *Reporting Discrepancies*:

1. *Contractor's Verification of Figures and Field Measurements*: Before undertaking each part of the Work, Contractor shall carefully study the Contract Documents, and check and verify pertinent figures and dimensions therein, particularly with respect to applicable field measurements. Contractor shall promptly report in writing to Engineer any conflict, error, ambiguity, or discrepancy that Contractor discovers, or has actual knowledge of, and shall not proceed with any Work affected thereby until the conflict, error, ambiguity, or discrepancy is resolved, by a clarification or interpretation by Engineer, or by an amendment or supplement to the Contract Documents issued pursuant to Paragraph 11.01.

2. *Contractor's Review of Contract Documents*: If, before or during the performance of the Work, Contractor discovers any conflict, error, ambiguity, or discrepancy within the Contract Documents, or between the Contract Documents and (a) any applicable Law or Regulation, (b) actual field conditions, (c) any standard specification, manual, reference standard, or code, or (d) any instruction of any Supplier, then Contractor shall promptly report it to Engineer in writing. Contractor shall not proceed with the Work affected thereby (except in an emergency as required by Paragraph 7.15) until the conflict, error, ambiguity, or discrepancy is resolved, by a clarification or interpretation by Engineer, or by an amendment or supplement to the Contract Documents issued pursuant to Paragraph 11.01.

3. Contractor shall not be liable to Owner or Engineer for failure to report any conflict, error, ambiguity, or discrepancy in the Contract Documents unless Contractor had actual knowledge thereof.

B. *Resolving Discrepancies*:

1. Except as may be otherwise specifically stated in the Contract Documents, the provisions of the part of the Contract Documents prepared by or for Engineer shall take precedence in resolving any conflict, error, ambiguity, or discrepancy between such provisions of the Contract Documents and:

a. the provisions of any standard specification, manual, reference standard, or code, or the instruction of any Supplier (whether or not specifically incorporated by reference as a Contract Document); or

b. the provisions of any Laws or Regulations applicable to the performance of the Work (unless such an interpretation of the provisions of the Contract Documents would result in violation of such Law or Regulation).

3.04 *Requirements of the Contract Documents*

A. During the performance of the Work and until final payment, Contractor and Owner shall submit to the Engineer all matters in question concerning the requirements of the Contract Documents (sometimes referred to as requests for information or interpretation—RFIs), or relating to the acceptability of the Work under the Contract Documents, as soon as possible after such matters arise. Engineer will be the initial interpreter of the requirements of the Contract Documents, and judge of the acceptability of the Work thereunder.

B. Engineer will, with reasonable promptness, render a written clarification, interpretation, or decision on the issue submitted, or initiate an amendment or supplement to the Contract Documents. Engineer's written clarification, interpretation, or decision will be final and

Copyright © 2013 National Society of Professional Engineers, American Council of Engineering Companies, and American Society of Civil Engineers. All rights reserved.

binding on Contractor, unless it appeals by submitting a Change Proposal, and on Owner, unless it appeals by filing a Claim.

C. If a submitted matter in question concerns terms and conditions of the Contract Documents that do not involve (1) the performance or acceptability of the Work under the Contract Documents, (2) the design (as set forth in the Drawings, Specifications, or otherwise), or (3) other engineering or technical matters, then Engineer will promptly give written notice to Owner and Contractor that Engineer is unable to provide a decision or interpretation. If Owner and Contractor are unable to agree on resolution of such a matter in question, either party may pursue resolution as provided in Article 12.

3.05 *Reuse of Documents*

A. Contractor and its Subcontractors and Suppliers shall not:

1. have or acquire any title to or ownership rights in any of the Drawings, Specifications, or other documents (or copies of any thereof) prepared by or bearing the seal of Engineer or its consultants, including electronic media editions, or reuse any such Drawings, Specifications, other documents, or copies thereof on extensions of the Project or any other project without written consent of Owner and Engineer and specific written verification or adaptation by Engineer; or

2. have or acquire any title or ownership rights in any other Contract Documents, reuse any such Contract Documents for any purpose without Owner's express written consent, or violate any copyrights pertaining to such Contract Documents.

B. The prohibitions of this Paragraph 3.05 will survive final payment, or termination of the Contract. Nothing herein shall preclude Contractor from retaining copies of the Contract Documents for record purposes.

ARTICLE 4 – COMMENCEMENT AND PROGRESS OF THE WORK

4.01 *Commencement of Contract Times; Notice to Proceed*

A. The Contract Times will commence to run on the thirtieth day after the Effective Date of the Contract or, if a Notice to Proceed is given, on the day indicated in the Notice to Proceed. A Notice to Proceed may be given at any time within 30 days after the Effective Date of the Contract. In no event will the Contract Times commence to run later than the sixtieth day after the day of Bid opening or the thirtieth day after the Effective Date of the Contract, whichever date is earlier.

4.02 *Starting the Work*

A. Contractor shall start to perform the Work on the date when the Contract Times commence to run. No Work shall be done at the Site prior to such date.

4.03 *Reference Points*

A. Owner shall provide engineering surveys to establish reference points for construction which in Engineer's judgment are necessary to enable Contractor to proceed with the Work. Contractor shall be responsible for laying out the Work, shall protect and preserve the established reference points and property monuments, and shall make no changes or relocations without the prior written approval of Owner. Contractor shall report to Engineer whenever any reference point or property monument is lost or destroyed or requires relocation because of necessary changes in grades or locations, and shall be

EJCDC® C-700, Standard General Conditions of the Construction Contract.
Copyright © 2013 National Society of Professional Engineers, American Council of Engineering Companies, and American Society of Civil Engineers. All rights reserved.

responsible for the accurate replacement or relocation of such reference points or property monuments by professionally qualified personnel.

4.04 *Progress Schedule*

A. Contractor shall adhere to the Progress Schedule established in accordance with Paragraph 2.05 as it may be adjusted from time to time as provided below.

1. Contractor shall submit to Engineer for acceptance (to the extent indicated in Paragraph 2.05) proposed adjustments in the Progress Schedule that will not result in changing the Contract Times.

2. Proposed adjustments in the Progress Schedule that will change the Contract Times shall be submitted in accordance with the requirements of Article 11.

B. Contractor shall carry on the Work and adhere to the Progress Schedule during all disputes or disagreements with Owner. No Work shall be delayed or postponed pending resolution of any disputes or disagreements, or during any appeal process, except as permitted by Paragraph 16.04, or as Owner and Contractor may otherwise agree in writing.

4.05 *Delays in Contractor's Progress*

A. If Owner, Engineer, or anyone for whom Owner is responsible, delays, disrupts, or interferes with the performance or progress of the Work, then Contractor shall be entitled to an equitable adjustment in the Contract Times and Contract Price. Contractor's entitlement to an adjustment of the Contract Times is conditioned on such adjustment being essential to Contractor's ability to complete the Work within the Contract Times.

B. Contractor shall not be entitled to an adjustment in Contract Price or Contract Times for delay, disruption, or interference caused by or within the control of Contractor. Delay, disruption, and interference attributable to and within the control of a Subcontractor or Supplier shall be deemed to be within the control of Contractor.

C. If Contractor's performance or progress is delayed, disrupted, or interfered with by unanticipated causes not the fault of and beyond the control of Owner, Contractor, and those for which they are responsible, then Contractor shall be entitled to an equitable adjustment in Contract Times. Contractor's entitlement to an adjustment of the Contract Times is conditioned on such adjustment being essential to Contractor's ability to complete the Work within the Contract Times. Such an adjustment shall be Contractor's sole and exclusive remedy for the delays, disruption, and interference described in this paragraph. Causes of delay, disruption, or interference that may give rise to an adjustment in Contract Times under this paragraph include but are not limited to the following:

1. severe and unavoidable natural catastrophes such as fires, floods, epidemics, and earthquakes;

2. abnormal weather conditions;

3. acts or failures to act of utility owners (other than those performing other work at or adjacent to the Site by arrangement with the Owner, as contemplated in Article 8); and

4. acts of war or terrorism.

D. Delays, disruption, and interference to the performance or progress of the Work resulting from the existence of a differing subsurface or physical condition, an Underground Facility that was not shown or indicated by the Contract Documents, or not shown or indicated

Copyright © 2013 National Society of Professional Engineers, American Council of Engineering Companies, and American Society of Civil Engineers. All rights reserved.

with reasonable accuracy, and those resulting from Hazardous Environmental Conditions, are governed by Article 5.

E. Paragraph 8.03 governs delays, disruption, and interference to the performance or progress of the Work resulting from the performance of certain other work at or adjacent to the Site.

F. Contractor shall not be entitled to an adjustment in Contract Price or Contract Times for any delay, disruption, or interference if such delay is concurrent with a delay, disruption, or interference caused by or within the control of Contractor.

G. Contractor must submit any Change Proposal seeking an adjustment in Contract Price or Contract Times under this paragraph within 30 days of the commencement of the delaying, disrupting, or interfering event.

ARTICLE 5 – AVAILABILITY OF LANDS; SUBSURFACE AND PHYSICAL CONDITIONS; HAZARDOUS ENVIRONMENTAL CONDITIONS

5.01 *Availability of Lands*

A. Owner shall furnish the Site. Owner shall notify Contractor of any encumbrances or restrictions not of general application but specifically related to use of the Site with which Contractor must comply in performing the Work.

B. Upon reasonable written request, Owner shall furnish Contractor with a current statement of record legal title and legal description of the lands upon which permanent improvements are to be made and Owner's interest therein as necessary for giving notice of or filing a mechanic's or construction lien against such lands in accordance with applicable Laws and Regulations.

C. Contractor shall provide for all additional lands and access thereto that may be required for temporary construction facilities or storage of materials and equipment.

5.02 *Use of Site and Other Areas*

A. *Limitation on Use of Site and Other Areas*:

1. Contractor shall confine construction equipment, temporary construction facilities, the storage of materials and equipment, and the operations of workers to the Site, adjacent areas that Contractor has arranged to use through construction easements or otherwise, and other adjacent areas permitted by Laws and Regulations, and shall not unreasonably encumber the Site and such other adjacent areas with construction equipment or other materials or equipment. Contractor shall assume full responsibility for (a) damage to the Site; (b) damage to any such other adjacent areas used for Contractor's operations; (c) damage to any other adjacent land or areas; and (d) for injuries and losses sustained by the owners or occupants of any such land or areas; provided that such damage or injuries result from the performance of the Work or from other actions or conduct of the Contractor or those for which Contractor is responsible.

2. If a damage or injury claim is made by the owner or occupant of any such land or area because of the performance of the Work, or because of other actions or conduct of the Contractor or those for which Contractor is responsible, Contractor shall (a) take immediate corrective or remedial action as required by Paragraph 7.12, or otherwise; (b) promptly attempt to settle the claim as to all parties through negotiations with such owner or occupant, or otherwise resolve the claim by arbitration or other dispute

Copyright © 2013 National Society of Professional Engineers, American Council of Engineering Companies, and American Society of Civil Engineers. All rights reserved.

resolution proceeding, or at law; and (c) to the fullest extent permitted by Laws and Regulations, indemnify and hold harmless Owner and Engineer, and the officers, directors, members, partners, employees, agents, consultants and subcontractors of each and any of them from and against any such claim, and against all costs, losses, and damages (including but not limited to all fees and charges of engineers, architects, attorneys, and other professionals and all court or arbitration or other dispute resolution costs) arising out of or relating to any claim or action, legal or equitable, brought by any such owner or occupant against Owner, Engineer, or any other party indemnified hereunder to the extent caused directly or indirectly, in whole or in part by, or based upon, Contractor's performance of the Work, or because of other actions or conduct of the Contractor or those for which Contractor is responsible.

B. *Removal of Debris During Performance of the Work*: During the progress of the Work the Contractor shall keep the Site and other adjacent areas free from accumulations of waste materials, rubbish, and other debris. Removal and disposal of such waste materials, rubbish, and other debris shall conform to applicable Laws and Regulations.

C. *Cleaning*: Prior to Substantial Completion of the Work Contractor shall clean the Site and the Work and make it ready for utilization by Owner. At the completion of the Work Contractor shall remove from the Site and adjacent areas all tools, appliances, construction equipment and machinery, and surplus materials and shall restore to original condition all property not designated for alteration by the Contract Documents.

D. *Loading of Structures*: Contractor shall not load nor permit any part of any structure to be loaded in any manner that will endanger the structure, nor shall Contractor subject any part of the Work or adjacent structures or land to stresses or pressures that will endanger them.

5.03 *Subsurface and Physical Conditions*

A. No reports of explorations or tests of subsurface conditions at or adjacent to the Site, or drawings of physical conditions relating to existing surface or subsurface structures at the Site, are known to Owner.

5.04 *Differing Subsurface or Physical Conditions*

A. *Notice by Contractor*: If Contractor believes that any subsurface or physical condition that is uncovered or revealed at the Site either:

1. is of such a nature as to establish that any Technical Data on which Contractor is entitled to rely as provided in Paragraph 5.03 is materially inaccurate; or

2. is of such a nature as to require a change in the Drawings or Specifications; or

3. differs materially from that shown or indicated in the Contract Documents; or

4. is of an unusual nature, and differs materially from conditions ordinarily encountered and generally recognized as inherent in work of the character provided for in the Contract Documents;

then Contractor shall, promptly after becoming aware thereof and before further disturbing the subsurface or physical conditions or performing any Work in connection therewith (except in an emergency as required by Paragraph 7.15), notify Owner and Engineer in writing about such condition. Contractor shall not further disturb such condition or perform any Work in connection therewith (except with respect to an emergency) until receipt of a written statement permitting Contractor to do so.

Copyright © 2013 National Society of Professional Engineers, American Council of Engineering Companies, and American Society of Civil Engineers. All rights reserved.

B. *Engineer's Review*: After receipt of written notice as required by the preceding paragraph, Engineer will promptly review the subsurface or physical condition in question; determine the necessity of Owner's obtaining additional exploration or tests with respect to the condition; conclude whether the condition falls within any one or more of the differing site condition categories in Paragraph 5.04.A above; obtain any pertinent cost or schedule information from Contractor; prepare recommendations to Owner regarding the Contractor's resumption of Work in connection with the subsurface or physical condition in question and the need for any change in the Drawings or Specifications; and advise Owner in writing of Engineer's findings, conclusions, and recommendations.

C. *Owner's Statement to Contractor Regarding Site Condition*: After receipt of Engineer's written findings, conclusions, and recommendations, Owner shall issue a written statement to Contractor (with a copy to Engineer) regarding the subsurface or physical condition in question, addressing the resumption of Work in connection with such condition, indicating whether any change in the Drawings or Specifications will be made, and adopting or rejecting Engineer's written findings, conclusions, and recommendations, in whole or in part.

D. *Possible Price and Times Adjustments*:

1. Contractor shall be entitled to an equitable adjustment in Contract Price or Contract Times, or both, to the extent that the existence of a differing subsurface or physical condition, or any related delay, disruption, or interference, causes an increase or decrease in Contractor's cost of, or time required for, performance of the Work; subject, however, to the following:

    a. such condition must fall within any one or more of the categories described in Paragraph 5.04.A;

    b. with respect to Work that is paid for on a unit price basis, any adjustment in Contract Price will be subject to the provisions of Paragraph 13.03; and,

    c. Contractor's entitlement to an adjustment of the Contract Times is conditioned on such adjustment being essential to Contractor's ability to complete the Work within the Contract Times.

2. Contractor shall not be entitled to any adjustment in the Contract Price or Contract Times with respect to a subsurface or physical condition if:

    a. Contractor knew of the existence of such condition at the time Contractor made a commitment to Owner with respect to Contract Price and Contract Times by the submission of a Bid or becoming bound under a negotiated contract, or otherwise; or

    b. the existence of such condition reasonably could have been discovered or revealed as a result of any examination, investigation, exploration, test, or study of the Site and contiguous areas expressly required by the Bidding Requirements or Contract Documents to be conducted by or for Contractor prior to Contractor's making such commitment; or

    c. Contractor failed to give the written notice as required by Paragraph 5.04.A.

3. If Owner and Contractor agree regarding Contractor's entitlement to and the amount or extent of any adjustment in the Contract Price or Contract Times, or both, then any such adjustment shall be set forth in a Change Order.

Copyright © 2013 National Society of Professional Engineers, American Council of Engineering Companies, and American Society of Civil Engineers. All rights reserved.

4. Contractor may submit a Change Proposal regarding its entitlement to or the amount or extent of any adjustment in the Contract Price or Contract Times, or both, no later than 30 days after Owner's issuance of the Owner's written statement to Contractor regarding the subsurface or physical condition in question.

5.05 *Underground Facilities*

A. *Contractor's Responsibilities*: The information and data shown or indicated in the Contract Documents with respect to existing Underground Facilities at or adjacent to the Site is based on information and data furnished to Owner or Engineer by the owners of such Underground Facilities, including Owner, or by others. Unless it is otherwise expressly provided in the Supplementary Conditions:

1. Owner and Engineer do not warrant or guarantee the accuracy or completeness of any such information or data provided by others; and

2. the cost of all of the following will be included in the Contract Price, and Contractor shall have full responsibility for:

a. reviewing and checking all information and data regarding existing Underground Facilities at the Site;

b. locating all Underground Facilities shown or indicated in the Contract Documents as being at the Site;

c. coordination of the Work with the owners (including Owner) of such Underground Facilities, during construction; and

d. the safety and protection of all existing Underground Facilities at the Site, and repairing any damage thereto resulting from the Work.

B. *Notice by Contractor*: If Contractor believes that an Underground Facility that is uncovered or revealed at the Site was not shown or indicated in the Contract Documents, or was not shown or indicated with reasonable accuracy, then Contractor shall, promptly after becoming aware thereof and before further disturbing conditions affected thereby or performing any Work in connection therewith (except in an emergency as required by Paragraph 7.15), identify the owner of such Underground Facility and give written notice to that owner and to Owner and Engineer.

C. *Engineer's Review*: Engineer will promptly review the Underground Facility and conclude whether such Underground Facility was not shown or indicated in the Contract Documents, or was not shown or indicated with reasonable accuracy; obtain any pertinent cost or schedule information from Contractor; prepare recommendations to Owner regarding the Contractor's resumption of Work in connection with the Underground Facility in question; determine the extent, if any, to which a change is required in the Drawings or Specifications to reflect and document the consequences of the existence or location of the Underground Facility; and advise Owner in writing of Engineer's findings, conclusions, and recommendations. During such time, Contractor shall be responsible for the safety and protection of such Underground Facility.

D. *Owner's Statement to Contractor Regarding Underground Facility*: After receipt of Engineer's written findings, conclusions, and recommendations, Owner shall issue a written statement to Contractor (with a copy to Engineer) regarding the Underground Facility in question, addressing the resumption of Work in connection with such Underground Facility, indicating whether any change in the Drawings or Specifications will be made, and adopting

EJCDC® C-700, Standard General Conditions of the Construction Contract.
Copyright © 2013 National Society of Professional Engineers, American Council of Engineering Companies, and American Society of Civil Engineers. All rights reserved.

or rejecting Engineer's written findings, conclusions, and recommendations in whole or in part.

E. *Possible Price and Times Adjustments*:

1. Contractor shall be entitled to an equitable adjustment in the Contract Price or Contract Times, or both, to the extent that any existing Underground Facility at the Site that was not shown or indicated in the Contract Documents, or was not shown or indicated with reasonable accuracy, or any related delay, disruption, or interference, causes an increase or decrease in Contractor's cost of, or time required for, performance of the Work; subject, however, to the following:

a. Contractor did not know of and could not reasonably have been expected to be aware of or to have anticipated the existence or actual location of the Underground Facility in question;

b. With respect to Work that is paid for on a unit price basis, any adjustment in Contract Price will be subject to the provisions of Paragraph 13.03;

c. Contractor's entitlement to an adjustment of the Contract Times is conditioned on such adjustment being essential to Contractor's ability to complete the Work within the Contract Times; and

d. Contractor gave the notice required in Paragraph 5.05.B.

2. If Owner and Contractor agree regarding Contractor's entitlement to and the amount or extent of any adjustment in the Contract Price or Contract Times, or both, then any such adjustment shall be set forth in a Change Order.

3. Contractor may submit a Change Proposal regarding its entitlement to or the amount or extent of any adjustment in the Contract Price or Contract Times, or both, no later than 30 days after Owner's issuance of the Owner's written statement to Contractor regarding the Underground Facility in question.

5.06 *Hazardous Environmental Conditions at Site*

A. No reports or drawings related to Hazardous Environmental Conditions at the Site are known to Owner.

B. Contractor shall not be responsible for removing or remediating any Hazardous Environmental Condition encountered, uncovered, or revealed at the Site unless such removal or remediation is expressly identified in the Contract Documents to be within the scope of the Work.

C. Contractor shall be responsible for controlling, containing, and duly removing all Constituents of Concern brought to the Site by Contractor, Subcontractors, Suppliers, or anyone else for whom Contractor is responsible, and for any associated costs; and for the costs of removing and remediating any Hazardous Environmental Condition created by the presence of any such Constituents of Concern.

D. If Contractor encounters, uncovers, or reveals a Hazardous Environmental Condition whose removal or remediation is not expressly identified in the Contract Documents as being within the scope of the Work, or if Contractor or anyone for whom Contractor is responsible creates a Hazardous Environmental Condition, then Contractor shall immediately: (1) secure or otherwise isolate such condition; (2) stop all Work in connection with such condition and in any area affected thereby (except in an emergency as required by Paragraph 7.15); and (3) notify Owner and Engineer (and promptly thereafter confirm

Copyright © 2013 National Society of Professional Engineers, American Council of Engineering Companies, and American Society of Civil Engineers. All rights reserved.

such notice in writing). Owner shall promptly consult with Engineer concerning the necessity for Owner to retain a qualified expert to evaluate such condition or take corrective action, if any. Promptly after consulting with Engineer, Owner shall take such actions as are necessary to permit Owner to timely obtain required permits and provide Contractor the written notice required by Paragraph 5.06.F. If Contractor or anyone for whom Contractor is responsible created the Hazardous Environmental Condition in question, then Owner may remove and remediate the Hazardous Environmental Condition, and impose a set-off against payments to account for the associated costs.

E. Contractor shall not resume Work in connection with such Hazardous Environmental Condition or in any affected area until after Owner has obtained any required permits related thereto, and delivered written notice to Contractor either (1) specifying that such condition and any affected area is or has been rendered safe for the resumption of Work, or (2) specifying any special conditions under which such Work may be resumed safely.

F. If Owner and Contractor cannot agree as to entitlement to or on the amount or extent, if any, of any adjustment in Contract Price or Contract Times, or both, as a result of such Work stoppage or such special conditions under which Work is agreed to be resumed by Contractor, then within 30 days of Owner's written notice regarding the resumption of Work, Contractor may submit a Change Proposal, or Owner may impose a set-off.

G. If after receipt of such written notice Contractor does not agree to resume such Work based on a reasonable belief it is unsafe, or does not agree to resume such Work under such special conditions, then Owner may order the portion of the Work that is in the area affected by such condition to be deleted from the Work, following the contractual change procedures in Article 11. Owner may have such deleted portion of the Work performed by Owner's own forces or others in accordance with Article 8.

H. To the fullest extent permitted by Laws and Regulations, Owner shall indemnify and hold harmless Contractor, Subcontractors, and Engineer, and the officers, directors, members, partners, employees, agents, consultants, and subcontractors of each and any of them from and against all claims, costs, losses, and damages (including but not limited to all fees and charges of engineers, architects, attorneys, and other professionals and all court or arbitration or other dispute resolution costs) arising out of or relating to a Hazardous Environmental Condition, provided that such Hazardous Environmental Condition (1) was not shown or indicated in the Drawings, Specifications, or other Contract Documents, or identified in the Contract Documents to be included within the scope of the Work, and (2) was not created by Contractor or by anyone for whom Contractor is responsible. Nothing in this Paragraph 5.06.H shall obligate Owner to indemnify any individual or entity from and against the consequences of that individual's or entity's own negligence.

I. To the fullest extent permitted by Laws and Regulations, Contractor shall indemnify and hold harmless Owner and Engineer, and the officers, directors, members, partners, employees, agents, consultants, and subcontractors of each and any of them from and against all claims, costs, losses, and damages (including but not limited to all fees and charges of engineers, architects, attorneys, and other professionals and all court or arbitration or other dispute resolution costs) arising out of or relating to the failure to control, contain, or remove a Constituent of Concern brought to the Site by Contractor or by anyone for whom Contractor is responsible, or to a Hazardous Environmental Condition created by Contractor or by anyone for whom Contractor is responsible. Nothing in this Paragraph 5.06.J shall obligate Contractor to indemnify any individual or entity from and against the consequences of that individual's or entity's own negligence.

Copyright © 2013 National Society of Professional Engineers, American Council of Engineering Companies, and American Society of Civil Engineers. All rights reserved.

J. The provisions of Paragraphs 5.03, 5.04, and 5.05 do not apply to the presence of Constituents of Concern or to a Hazardous Environmental Condition uncovered or revealed at the Site.

ARTICLE 6 – BONDS AND INSURANCE

6.01 *Performance, Payment, and Other Bonds*

A. Contractor shall furnish a performance bond and a payment bond, each in an amount at least equal to the Contract Price, as security for the faithful performance and payment of all of Contractor's obligations under the Contract. These bonds shall remain in effect until one year after the date when final payment becomes due or until completion of the correction period specified in Paragraph 15.08, whichever is later, except as provided otherwise by Laws or Regulations, the Supplementary Conditions, or other specific provisions of the Contract. Contractor shall also furnish such other bonds as are required by the Supplementary Conditions or other specific provisions of the Contract.

B. All bonds shall be in the form prescribed by the Contract except as provided otherwise by Laws or Regulations, and shall be executed by such sureties as are named in "Companies Holding Certificates of Authority as Acceptable Sureties on Federal Bonds and as Acceptable Reinsuring Companies" as published in Circular 570 (as amended and supplemented) by the Financial Management Service, Surety Bond Branch, U.S. Department of the Treasury. A bond signed by an agent or attorney-in-fact must be accompanied by a certified copy of that individual's authority to bind the surety. The evidence of authority shall show that it is effective on the date the agent or attorney-in-fact signed the accompanying bond.

C. Contractor shall obtain the required bonds from surety companies that are duly licensed or authorized in the jurisdiction in which the Project is located to issue bonds in the required amounts.

D. If the surety on a bond furnished by Contractor is declared bankrupt or becomes insolvent, or its right to do business is terminated in any state or jurisdiction where any part of the Project is located, or the surety ceases to meet the requirements above, then Contractor shall promptly notify Owner and Engineer and shall, within 20 days after the event giving rise to such notification, provide another bond and surety, both of which shall comply with the bond and surety requirements above.

E. If Contractor has failed to obtain a required bond, Owner may exclude the Contractor from the Site and exercise Owner's termination rights under Article 16.

F. Upon request, Owner shall provide a copy of the payment bond to any Subcontractor, Supplier, or other person or entity claiming to have furnished labor or materials used in the performance of the Work.

6.02 *Insurance—General Provisions*

A. Owner and Contractor shall obtain and maintain insurance as required in this Article and in the Supplementary Conditions.

B. All insurance required by the Contract to be purchased and maintained by Owner or Contractor shall be obtained from insurance companies that are duly licensed or authorized, in the state or jurisdiction in which the Project is located, to issue insurance policies for the required limits and coverages. Unless a different standard is indicated in the

Copyright © 2013 National Society of Professional Engineers, American Council of Engineering Companies, and American Society of Civil Engineers. All rights reserved.

Supplementary Conditions, all companies that provide insurance policies required under this Contract shall have an A.M. Best rating of A-VII or better.

C. Contractor shall deliver to Owner, with copies to each named insured and additional insured (as identified in this Article, in the Supplementary Conditions, or elsewhere in the Contract), certificates of insurance establishing that Contractor has obtained and is maintaining the policies, coverages, and endorsements required by the Contract. Upon request by Owner or any other insured, Contractor shall also furnish other evidence of such required insurance, including but not limited to copies of policies and endorsements, and documentation of applicable self-insured retentions and deductibles. Contractor may block out (redact) any confidential premium or pricing information contained in any policy or endorsement furnished under this provision.

D. Owner shall deliver to Contractor, with copies to each named insured and additional insured (as identified in this Article, the Supplementary Conditions, or elsewhere in the Contract), certificates of insurance establishing that Owner has obtained and is maintaining the policies, coverages, and endorsements required of Owner by the Contract (if any). Upon request by Contractor or any other insured, Owner shall also provide other evidence of such required insurance (if any), including but not limited to copies of policies and endorsements, and documentation of applicable self-insured retentions and deductibles. Owner may block out (redact) any confidential premium or pricing information contained in any policy or endorsement furnished under this provision.

E. Failure of Owner or Contractor to demand such certificates or other evidence of the other party's full compliance with these insurance requirements, or failure of Owner or Contractor to identify a deficiency in compliance from the evidence provided, shall not be construed as a waiver of the other party's obligation to obtain and maintain such insurance.

F. If either party does not purchase or maintain all of the insurance required of such party by the Contract, such party shall notify the other party in writing of such failure to purchase prior to the start of the Work, or of such failure to maintain prior to any change in the required coverage.

G. If Contractor has failed to obtain and maintain required insurance, Owner may exclude the Contractor from the Site, impose an appropriate set-off against payment, and exercise Owner's termination rights under Article 16.

H. Without prejudice to any other right or remedy, if a party has failed to obtain required insurance, the other party may elect to obtain equivalent insurance to protect such other party's interests at the expense of the party who was required to provide such coverage, and the Contract Price shall be adjusted accordingly.

I. Owner does not represent that insurance coverage and limits established in this Contract necessarily will be adequate to protect Contractor or Contractor's interests.

J. The insurance and insurance limits required herein shall not be deemed as a limitation on Contractor's liability under the indemnities granted to Owner and other individuals and entities in the Contract.

6.03 *Contractor's Insurance*

A. *Workers' Compensation*: Contractor shall purchase and maintain workers' compensation and employer's liability insurance for:

1. claims under workers' compensation, disability benefits, and other similar employee benefit acts.

Copyright © 2013 National Society of Professional Engineers, American Council of Engineering Companies, and American Society of Civil Engineers. All rights reserved.

2. United States Longshoreman and Harbor Workers' Compensation Act and Jones Act coverage (if applicable).

3. claims for damages because of bodily injury, occupational sickness or disease, or death of Contractor's employees (by stop-gap endorsement in monopolist worker's compensation states).

4. Foreign voluntary worker compensation (if applicable).

B. *Commercial General Liability—Claims Covered*: Contractor shall purchase and maintain commercial general liability insurance, covering all operations by or on behalf of Contractor, on an occurrence basis, against:

1. claims for damages because of bodily injury, sickness or disease, or death of any person other than Contractor's employees.

2. claims for damages insured by reasonably available personal injury liability coverage.

3. claims for damages, other than to the Work itself, because of injury to or destruction of tangible property wherever located, including loss of use resulting therefrom.

C. *Commercial General Liability—Form and Content*: Contractor's commercial liability policy shall be written on a 1996 (or later) ISO commercial general liability form (occurrence form) and include the following coverages and endorsements:

1. Products and completed operations coverage:

a. Such insurance shall be maintained for three years after final payment.

b. Contractor shall furnish Owner and each other additional insured (as identified in the Supplementary Conditions or elsewhere in the Contract) evidence of continuation of such insurance at final payment and three years thereafter.

2. Blanket contractual liability coverage, to the extent permitted by law, including but not limited to coverage of Contractor's contractual indemnity obligations in Paragraph 7.18.

3. Broad form property damage coverage.

4. Severability of interest.

5. Underground, explosion, and collapse coverage.

6. Personal injury coverage.

7. Additional insured endorsements that include both ongoing operations and products and completed operations coverage through ISO Endorsements CG 20 10 10 01 and CG 20 37 10 01 (together); or CG 20 10 07 04 and CG 20 37 07 04 (together); or their equivalent.

8. For design professional additional insureds, ISO Endorsement CG 20 32 07 04, "Additional Insured—Engineers, Architects or Surveyors Not Engaged by the Named Insured" or its equivalent.

D. *Automobile liability*: Contractor shall purchase and maintain automobile liability insurance against claims for damages because of bodily injury or death of any person or property damage arising out of the ownership, maintenance, or use of any motor vehicle. The automobile liability policy shall be written on an occurrence basis.

E. *Umbrella or excess liability*: Contractor shall purchase and maintain umbrella or excess liability insurance written over the underlying employer's liability, commercial general

Copyright © 2013 National Society of Professional Engineers, American Council of Engineering Companies, and American Society of Civil Engineers. All rights reserved.

liability, and automobile liability insurance described in the paragraphs above. Subject to industry-standard exclusions, the coverage afforded shall follow form as to each and every one of the underlying policies.

F. *Contractor's pollution liability insurance*: Contractor shall purchase and maintain a policy covering third-party injury and property damage claims, including clean-up costs, as a result of pollution conditions arising from Contractor's operations and completed operations. This insurance shall be maintained for no less than three years after final completion.

G. *Additional insureds*: The Contractor's commercial general liability, automobile liability, umbrella or excess, and pollution liability policies shall include and list as additional insureds Owner and Engineer, and any individuals or entities identified in the Supplementary Conditions; include coverage for the respective officers, directors, members, partners, employees, agents, consultants, and subcontractors of each and any of all such additional insureds; and the insurance afforded to these additional insureds shall provide primary coverage for all claims covered thereby (including as applicable those arising from both ongoing and completed operations) on a non-contributory basis. Contractor shall obtain all necessary endorsements to support these requirements.

H. *Contractor's professional liability insurance*: If Contractor will provide or furnish professional services under this Contract, through a delegation of professional design services or otherwise, then Contractor shall be responsible for purchasing and maintaining applicable professional liability insurance. This insurance shall provide protection against claims arising out of performance of professional design or related services, and caused by a negligent error, omission, or act for which the insured party is legally liable. It shall be maintained throughout the duration of the Contract and for a minimum of two years after Substantial Completion. If such professional design services are performed by a Subcontractor, and not by Contractor itself, then the requirements of this paragraph may be satisfied through the purchasing and maintenance of such insurance by such Subcontractor.

I. *General provisions*: The policies of insurance required by this Paragraph 6.03 shall:

1. include at least the specific coverages provided in this Article.

2. be written for not less than the limits of liability provided in this Article and in the Supplementary Conditions, or required by Laws or Regulations, whichever is greater.

3. contain a provision or endorsement that the coverage afforded will not be canceled, materially changed, or renewal refused until at least 10 days prior written notice has been given to Contractor. Within three days of receipt of any such written notice, Contractor shall provide a copy of the notice to Owner, Engineer, and each other insured under the policy.

4. remain in effect at least until final payment (and longer if expressly required in this Article) and at all times thereafter when Contractor may be correcting, removing, or replacing defective Work as a warranty or correction obligation, or otherwise, or returning to the Site to conduct other tasks arising from the Contract Documents.

5. be appropriate for the Work being performed and provide protection from claims that may arise out of or result from Contractor's performance of the Work and Contractor's other obligations under the Contract Documents, whether it is to be performed by Contractor, any Subcontractor or Supplier, or by anyone directly or indirectly employed by any of them to perform any of the Work, or by anyone for whose acts any of them may be liable.

Copyright © 2013 National Society of Professional Engineers, American Council of Engineering Companies, and American Society of Civil Engineers. All rights reserved.

J. The coverage requirements for specific policies of insurance must be met by such policies, and not by reference to excess or umbrella insurance provided in other policies.

K. The limits of liability for the insurance required by Paragraph 6.03 of the General Conditions shall provide coverage for not less than the following amounts or greater where required by Laws and Regulations:

1. Workers' Compensation, and related coverages under Paragraphs 6.03.A.1 and A.2 of the General Conditions:

State:		**Statutory**
Federal, if applicable (e.g., Longshoreman's):		**Statutory**
Jones Act coverage, if applicable:		
Bodily injury by accident, each accident	**$**	**1,000,000**
Bodily injury by disease, aggregate	**$**	**1,000,000**
Employer's Liability:		
Bodily injury, each accident	**$**	**1,000,000**
Bodily injury by disease, each employee	**$**	**1,000,000**
Bodily injury/disease aggregate	**$**	
For work performed in monopolistic states, stop-gap liability coverage shall be endorsed to either the worker's compensation or commercial general liability policy with a minimum limit of:	**$**	
Foreign voluntary worker compensation		**Statutory**

2. Contractor's Commercial General Liability under Paragraphs 6.03.B and 6.03.C of the General Conditions:

General Aggregate	**$**	**2,000,000**
Products - Completed Operations Aggregate	**$**	**2,000,000**
Personal and Advertising Injury	**$**	**1,000,000**
Each Occurrence (Bodily Injury and Property Damage)	**$**	**1,000,000**

3. Automobile Liability under Paragraph 6.03.D. of the General Conditions:

Copyright © 2013 National Society of Professional Engineers, American Council of Engineering Companies, and American Society of Civil Engineers. All rights reserved.

Bodily Injury:

Each person	**$**	**500,000**
Each accident	**$**	**1,000,000**

Property Damage:

Each accident	**$**	**2,000,000**
[or]		
Combined Single Limit of	**$**	**2,000,000**

4. Excess or Umbrella Liability:

Per Occurrence	**$**	
General Aggregate	**$**	

5. Contractor's Pollution Liability:

Each Occurrence	**$**	
General Aggregate	**$**	

☐ **If box is checked, Contractor is not required to provide Contractor's Pollution Liability insurance under this Contract**

6. Additional Insureds: In addition to Owner and Engineer, include as additional insureds the following: MDOT

7. Contractor's Professional Liability:

Each Claim	**$**	
Annual Aggregate	**$**	

6.04 *Owner's Liability Insurance*

A. In addition to the insurance required to be provided by Contractor under Paragraph 6.03, Owner, at Owner's option, may purchase and maintain at Owner's expense Owner's own liability insurance as will protect Owner against claims which may arise from operations under the Contract Documents.

B. Owner's liability policies, if any, operate separately and independently from policies required to be provided by Contractor, and Contractor cannot rely upon Owner's liability policies for any of Contractor's obligations to the Owner, Engineer, or third parties.

6.05 *Property Insurance*

A. *Builder's Risk*: Unless otherwise provided in the Supplementary Conditions, Contractor shall purchase and maintain builder's risk insurance upon the Work on a completed value basis,

Copyright © 2013 National Society of Professional Engineers, American Council of Engineering Companies, and American Society of Civil Engineers. All rights reserved.

in the amount of the full insurable replacement cost thereof (subject to such deductible amounts as may be provided in the Supplementary Conditions or required by Laws and Regulations). This insurance shall:

1. include the Owner and Contractor as named insureds, and all Subcontractors, and any individuals or entities required by the Supplementary Conditions to be insured under such builder's risk policy, as insureds or named insureds. For purposes of the remainder of this Paragraph 6.05, Paragraphs 6.06 and 6.07, and any corresponding Supplementary Conditions, the parties required to be insured shall collectively be referred to as "insureds."

2. be written on a builder's risk "all risk" policy form that shall at least include insurance for physical loss or damage to the Work, temporary buildings, falsework, and materials and equipment in transit, and shall insure against at least the following perils or causes of loss: fire; lightning; windstorm; riot; civil commotion; terrorism; vehicle impact; aircraft; smoke; theft; vandalism and malicious mischief; mechanical breakdown, boiler explosion, and artificially generated electric current; earthquake; volcanic activity, and other earth movement; flood; collapse; explosion; debris removal; demolition occasioned by enforcement of Laws and Regulations; water damage (other than that caused by flood); and such other perils or causes of loss as may be specifically required by the Supplementary Conditions. If insurance against mechanical breakdown, boiler explosion, and artificially generated electric current; earthquake; volcanic activity, and other earth movement; or flood, are not commercially available under builder's risk policies, by endorsement or otherwise, such insurance may be provided through other insurance policies acceptable to Owner and Contractor.

3. cover, as insured property, at least the following: (a) the Work and all materials, supplies, machinery, apparatus, equipment, fixtures, and other property of a similar nature that are to be incorporated into or used in the preparation, fabrication, construction, erection, or completion of the Work, including Owner-furnished or assigned property; (b) spare parts inventory required within the scope of the Contract; and (c) temporary works which are not intended to form part of the permanent constructed Work but which are intended to provide working access to the Site, or to the Work under construction, or which are intended to provide temporary support for the Work under construction, including scaffolding, form work, fences, shoring, falsework, and temporary structures.

4. cover expenses incurred in the repair or replacement of any insured property (including but not limited to fees and charges of engineers and architects).

5. extend to cover damage or loss to insured property while in temporary storage at the Site or in a storage location outside the Site (but not including property stored at the premises of a manufacturer or Supplier).

6. extend to cover damage or loss to insured property while in transit.

7. allow for partial occupation or use of the Work by Owner, such that those portions of the Work that are not yet occupied or used by Owner shall remain covered by the builder's risk insurance.

8. allow for the waiver of the insurer's subrogation rights, as set forth below.

9. provide primary coverage for all losses and damages caused by the perils or causes of loss covered.

10. not include a co-insurance clause.

Copyright © 2013 National Society of Professional Engineers, American Council of Engineering Companies, and American Society of Civil Engineers. All rights reserved.

11. include an exception for ensuing losses from physical damage or loss with respect to any defective workmanship, design, or materials exclusions.

12. include performance/hot testing and start-up.

13. be maintained in effect, subject to the provisions herein regarding Substantial Completion and partial occupancy or use of the Work by Owner, until the Work is complete.

B. *Notice of Cancellation or Change*: All the policies of insurance (and the certificates or other evidence thereof) required to be purchased and maintained in accordance with this Paragraph 6.05 will contain a provision or endorsement that the coverage afforded will not be canceled or materially changed or renewal refused until at least 10 days prior written notice has been given to the purchasing policyholder. Within three days of receipt of any such written notice, the purchasing policyholder shall provide a copy of the notice to each other insured.

C. *Deductibles*: The purchaser of any required builder's risk or property insurance shall pay for costs not covered because of the application of a policy deductible.

D. *Partial Occupancy or Use by Owner*: If Owner will occupy or use a portion or portions of the Work prior to Substantial Completion of all the Work as provided in Paragraph 15.04, then Owner (directly, if it is the purchaser of the builder's risk policy, or through Contractor) will provide notice of such occupancy or use to the builder's risk insurer. The builder's risk insurance shall not be canceled or permitted to lapse on account of any such partial use or occupancy; rather, those portions of the Work that are occupied or used by Owner may come off the builder's risk policy, while those portions of the Work not yet occupied or used by Owner shall remain covered by the builder's risk insurance.

E. *Additional Insurance*: If Contractor elects to obtain other special insurance to be included in or supplement the builder's risk or property insurance policies provided under this Paragraph 6.05, it may do so at Contractor's expense.

F. *Insurance of Other Property*: If the express insurance provisions of the Contract do not require or address the insurance of a property item or interest, such as tools, construction equipment, or other personal property owned by Contractor, a Subcontractor, or an employee of Contractor or a Subcontractor, then the entity or individual owning such property item will be responsible for deciding whether to insure it, and if so in what amount.

6.06 *Waiver of Rights*

A. All policies purchased in accordance with Paragraph 6.05, expressly including the builder's risk policy, shall contain provisions to the effect that in the event of payment of any loss or damage the insurers will have no rights of recovery against any insureds thereunder, or against Engineer or its consultants, or their officers, directors, members, partners, employees, agents, consultants, or subcontractors. Owner and Contractor waive all rights against each other and the respective officers, directors, members, partners, employees, agents, consultants, and subcontractors of each and any of them, for all losses and damages caused by, arising out of, or resulting from any of the perils or causes of loss covered by such policies and any other property insurance applicable to the Work; and, in addition, waive all such rights against Engineer, its consultants, all Subcontractors, all individuals or entities identified in the Supplementary Conditions as insureds, and the officers, directors, members, partners, employees, agents, consultants, and subcontractors of each and any of them, under such policies for losses and damages so caused. None of

EJCDC® C-700, Standard General Conditions of the Construction Contract.
Copyright © 2013 National Society of Professional Engineers, American Council of Engineering Companies, and American Society of Civil Engineers. All rights reserved.

the above waivers shall extend to the rights that any party making such waiver may have to the proceeds of insurance held by Owner or Contractor as trustee or fiduciary, or otherwise payable under any policy so issued.

B. Owner waives all rights against Contractor, Subcontractors, and Engineer, and the officers, directors, members, partners, employees, agents, consultants and subcontractors of each and any of them, for:

1. loss due to business interruption, loss of use, or other consequential loss extending beyond direct physical loss or damage to Owner's property or the Work caused by, arising out of, or resulting from fire or other perils whether or not insured by Owner; and

2. loss or damage to the completed Project or part thereof caused by, arising out of, or resulting from fire or other insured peril or cause of loss covered by any property insurance maintained on the completed Project or part thereof by Owner during partial occupancy or use pursuant to Paragraph 15.04, after Substantial Completion pursuant to Paragraph 15.03, or after final payment pursuant to Paragraph 15.06.

C. Any insurance policy maintained by Owner covering any loss, damage or consequential loss referred to in Paragraph 6.06.B shall contain provisions to the effect that in the event of payment of any such loss, damage, or consequential loss, the insurers will have no rights of recovery against Contractor, Subcontractors, or Engineer, or the officers, directors, members, partners, employees, agents, consultants, or subcontractors of each and any of them.

D. Contractor shall be responsible for assuring that the agreement under which a Subcontractor performs a portion of the Work contains provisions whereby the Subcontractor waives all rights against Owner, Contractor, all individuals or entities identified in the Supplementary Conditions as insureds, the Engineer and its consultants, and the officers, directors, members, partners, employees, agents, consultants, and subcontractors of each and any of them, for all losses and damages caused by, arising out of, relating to, or resulting from any of the perils or causes of loss covered by builder's risk insurance and any other property insurance applicable to the Work.

6.07 *Receipt and Application of Property Insurance Proceeds*

A. Any insured loss under the builder's risk and other policies of insurance required by Paragraph 6.05 will be adjusted and settled with the named insured that purchased the policy. Such named insured shall act as fiduciary for the other insureds, and give notice to such other insureds that adjustment and settlement of a claim is in progress. Any other insured may state its position regarding a claim for insured loss in writing within 15 days after notice of such claim.

B. Proceeds for such insured losses may be made payable by the insurer either jointly to multiple insureds, or to the named insured that purchased the policy in its own right and as fiduciary for other insureds, subject to the requirements of any applicable mortgage clause. A named insured receiving insurance proceeds under the builder's risk and other policies of insurance required by Paragraph 6.05 shall distribute such proceeds in accordance with such agreement as the parties in interest may reach, or as otherwise required under the dispute resolution provisions of this Contract or applicable Laws and Regulations.

C. If no other special agreement is reached, the damaged Work shall be repaired or replaced, the money so received applied on account thereof, and the Work and the cost thereof covered by Change Order, if needed.

Copyright © 2013 National Society of Professional Engineers, American Council of Engineering Companies, and American Society of Civil Engineers. All rights reserved.

ARTICLE 7 – CONTRACTOR'S RESPONSIBILITIES

7.01 *Supervision and Superintendence*

A. Contractor shall supervise, inspect, and direct the Work competently and efficiently, devoting such attention thereto and applying such skills and expertise as may be necessary to perform the Work in accordance with the Contract Documents. Contractor shall be solely responsible for the means, methods, techniques, sequences, and procedures of construction.

B. At all times during the progress of the Work, Contractor shall assign a competent resident superintendent who shall not be replaced without written notice to Owner and Engineer except under extraordinary circumstances.

7.02 *Labor; Working Hours*

A. Contractor shall provide competent, suitably qualified personnel to survey and lay out the Work and perform other work construction as required by the Contract Documents. Contractor shall at all times maintain good discipline and order at the Site.

B. Owner is exempt from payment of sales and compensating use taxes of the State of Michigan and of cities and counties thereof on all materials to be incorporated into the Work.

1. Owner will furnish the required certificates of tax exemption to Contractor for use in the purchase of supplies and materials to be incorporated into the Work.

2. Owner's exemption does not apply to construction tools, machinery, equipment, or other property purchased by or leased by Contractor, or to supplies or materials not incorporated into the Work.

7.03 *Services, Materials, and Equipment*

A. Unless otherwise specified in the Contract Documents, Contractor shall provide and assume full responsibility for all services, materials, equipment, labor, transportation, construction equipment and machinery, tools, appliances, fuel, power, light, heat, telephone, water, sanitary facilities, temporary facilities, and all other facilities and incidentals necessary for the performance, testing, start up, and completion of the Work, whether or not such items are specifically called for in the Contract Documents.

B. All materials and equipment incorporated into the Work shall be of good quality and new, except as otherwise provided in the Contract Documents. All special warranties and guarantees required by the Specifications shall expressly run to the benefit of Owner. If required by Engineer, Contractor shall furnish satisfactory evidence (including reports of required tests) as to the source, kind, and quality of materials and equipment.

C. All materials and equipment shall be stored, applied, installed, connected, erected, protected, used, cleaned, and conditioned in accordance with instructions of the applicable Supplier, except as otherwise may be provided in the Contract Documents.

7.04 *"Or Equals"*

A. Whenever an item of material or equipment is specified or described in the Contract Documents by using the name of a proprietary item or the name of a particular Supplier, the Contract Price has been based upon Contractor furnishing such item as specified. The specification or description of such an item is intended to establish the type, function, appearance, and quality required. Unless the specification or description contains or is

Copyright © 2013 National Society of Professional Engineers, American Council of Engineering Companies, and American Society of Civil Engineers. All rights reserved.

followed by words reading that no like, equivalent, or "or equal" item is permitted, Contractor may request that Engineer authorize the use of other items of material or equipment, or items from other proposed suppliers under the circumstances described below.

1. If Engineer in its sole discretion determines that an item of material or equipment proposed by Contractor is functionally equal to that named and sufficiently similar so that no change in related Work will be required, Engineer shall deem it an "or equal" item. For the purposes of this paragraph, a proposed item of material or equipment will be considered functionally equal to an item so named if:

    a. in the exercise of reasonable judgment Engineer determines that:

        1) it is at least equal in materials of construction, quality, durability, appearance, strength, and design characteristics;

        2) it will reliably perform at least equally well the function and achieve the results imposed by the design concept of the completed Project as a functioning whole;

        3) it has a proven record of performance and availability of responsive service; and

        4) it is not objectionable to Owner.

    b. Contractor certifies that, if approved and incorporated into the Work:

        1) there will be no increase in cost to the Owner or increase in Contract Times; and

        2) it will conform substantially to the detailed requirements of the item named in the Contract Documents.

B. *Contractor's Expense*: Contractor shall provide all data in support of any proposed "or equal" item at Contractor's expense.

C. *Engineer's Evaluation and Determination*: Engineer will be allowed a reasonable time to evaluate each "or-equal" request. Engineer may require Contractor to furnish additional data about the proposed "or-equal" item. Engineer will be the sole judge of acceptability. No "or-equal" item will be ordered, furnished, installed, or utilized until Engineer's review is complete and Engineer determines that the proposed item is an "or-equal", which will be evidenced by an approved Shop Drawing or other written communication. Engineer will advise Contractor in writing of any negative determination.

D. *Effect of Engineer's Determination*: Neither approval nor denial of an "or-equal" request shall result in any change in Contract Price. The Engineer's denial of an "or-equal" request shall be final and binding, and may not be reversed through an appeal under any provision of the Contract Documents.

E. *Treatment as a Substitution Request*: If Engineer determines that an item of material or equipment proposed by Contractor does not qualify as an "or-equal" item, Contractor may request that Engineer considered the proposed item as a substitute pursuant to Paragraph 7.05.

7.05 *Substitutes*

A. Unless the specification or description of an item of material or equipment required to be furnished under the Contract Documents contains or is followed by words reading that no

EJCDC® C-700, Standard General Conditions of the Construction Contract.
Copyright © 2013 National Society of Professional Engineers, American Council of Engineering Companies, and American Society of Civil Engineers. All rights reserved.

substitution is permitted, Contractor may request that Engineer authorize the use of other items of material or equipment under the circumstances described below. To the extent possible such requests shall be made before commencement of related construction at the Site.

1. Contractor shall submit sufficient information as provided below to allow Engineer to determine if the item of material or equipment proposed is functionally equivalent to that named and an acceptable substitute therefor. Engineer will not accept requests for review of proposed substitute items of material or equipment from anyone other than Contractor.

2. The requirements for review by Engineer will be as set forth in Paragraph 7.05.B, as supplemented by the Specifications, and as Engineer may decide is appropriate under the circumstances.

3. Contractor shall make written application to Engineer for review of a proposed substitute item of material or equipment that Contractor seeks to furnish or use. The application:

    a. shall certify that the proposed substitute item will:

        1) perform adequately the functions and achieve the results called for by the general design,

        2) be similar in substance to that specified, and

        3) be suited to the same use as that specified.

    b. will state:

        1) the extent, if any, to which the use of the proposed substitute item will necessitate a change in Contract Times,

        2) whether use of the proposed substitute item in the Work will require a change in any of the Contract Documents (or in the provisions of any other direct contract with Owner for other work on the Project) to adapt the design to the proposed substitute item, and

        3) whether incorporation or use of the proposed substitute item in connection with the Work is subject to payment of any license fee or royalty.

    c. will identify:

        1) all variations of the proposed substitute item from that specified, and

        2) available engineering, sales, maintenance, repair, and replacement services.

    d. shall contain an itemized estimate of all costs or credits that will result directly or indirectly from use of such substitute item, including but not limited to changes in Contract Price, shared savings, costs of redesign, and claims of other contractors affected by any resulting change.

B. *Engineer's Evaluation and Determination*: Engineer will be allowed a reasonable time to evaluate each substitute request, and to obtain comments and direction from Owner. Engineer may require Contractor to furnish additional data about the proposed substitute item. Engineer will be the sole judge of acceptability. No substitute will be ordered, furnished, installed, or utilized until Engineer's review is complete and Engineer determines that the proposed item is an acceptable substitute. Engineer's determination will be evidenced by a Field Order or a proposed Change Order accounting for the substitution

Copyright © 2013 National Society of Professional Engineers, American Council of Engineering Companies, and American Society of Civil Engineers. All rights reserved.

itself and all related impacts, including changes in Contract Price or Contract Times. Engineer will advise Contractor in writing of any negative determination.

C. *Special Guarantee*: Owner may require Contractor to furnish at Contractor's expense a special performance guarantee or other surety with respect to any substitute.

D. *Reimbursement of Engineer's Cost*: Engineer will record Engineer's costs in evaluating a substitute proposed or submitted by Contractor. Whether or not Engineer approves a substitute so proposed or submitted by Contractor, Contractor shall reimburse Owner for the reasonable charges of Engineer for evaluating each such proposed substitute. Contractor shall also reimburse Owner for the reasonable charges of Engineer for making changes in the Contract Documents (or in the provisions of any other direct contract with Owner) resulting from the acceptance of each proposed substitute.

E. *Contractor's Expense*: Contractor shall provide all data in support of any proposed substitute at Contractor's expense.

F. *Effect of Engineer's Determination*: If Engineer approves the substitution request, Contractor shall execute the proposed Change Order and proceed with the substitution. The Engineer's denial of a substitution request shall be final and binding, and may not be reversed through an appeal under any provision of the Contract Documents. Contractor may challenge the scope of reimbursement costs imposed under Paragraph 7.05.D, by timely submittal of a Change Proposal.

7.06 *Concerning Subcontractors, Suppliers, and Others*

A. Contractor may retain Subcontractors and Suppliers for the performance of parts of the Work. Such Subcontractors and Suppliers must be acceptable to Owner.

B. Contractor shall retain specific Subcontractors, Suppliers, or other individuals or entities for the performance of designated parts of the Work if required by the Contract to do so.

C. Subsequent to the submittal of Contractor's Bid or final negotiation of the terms of the Contract, Owner may not require Contractor to retain any Subcontractor, Supplier, or other individual or entity to furnish or perform any of the Work against which Contractor has reasonable objection.

D. Prior to entry into any binding subcontract or purchase order, Contractor shall submit to Owner the identity of the proposed Subcontractor or Supplier (unless Owner has already deemed such proposed Subcontractor or Supplier acceptable, during the bidding process or otherwise). Such proposed Subcontractor or Supplier shall be deemed acceptable to Owner unless Owner raises a substantive, reasonable objection within five days.

E. Owner may require the replacement of any Subcontractor, Supplier, or other individual or entity retained by Contractor to perform any part of the Work. Owner also may require Contractor to retain specific replacements; provided, however, that Owner may not require a replacement to which Contractor has a reasonable objection. If Contractor has submitted the identity of certain Subcontractors, Suppliers, or other individuals or entities for acceptance by Owner, and Owner has accepted it (either in writing or by failing to make written objection thereto), then Owner may subsequently revoke the acceptance of any such Subcontractor, Supplier, or other individual or entity so identified solely on the basis of substantive, reasonable objection after due investigation. Contractor shall submit an acceptable replacement for the rejected Subcontractor, Supplier, or other individual or entity.

Copyright © 2013 National Society of Professional Engineers, American Council of Engineering Companies, and American Society of Civil Engineers. All rights reserved.

F. If Owner requires the replacement of any Subcontractor, Supplier, or other individual or entity retained by Contractor to perform any part of the Work, then Contractor shall be entitled to an adjustment in Contract Price or Contract Times, or both, with respect to the replacement; and Contractor shall initiate a Change Proposal for such adjustment within 30 days of Owner's requirement of replacement.

G. No acceptance by Owner of any such Subcontractor, Supplier, or other individual or entity, whether initially or as a replacement, shall constitute a waiver of the right of Owner to the completion of the Work in accordance with the Contract Documents.

~~H. On a monthly basis Contractor shall submit to Engineer a complete list of all Subcontractors and Suppliers having a direct contract with Contractor, and of all other Subcontractors and Suppliers known to Contractor at the time of submittal.~~

I. Contractor shall be fully responsible to Owner and Engineer for all acts and omissions of the Subcontractors, Suppliers, and other individuals or entities performing or furnishing any of the Work just as Contractor is responsible for Contractor's own acts and omissions.

J. Contractor shall be solely responsible for scheduling and coordinating the work of Subcontractors, Suppliers, and all other individuals or entities performing or furnishing any of the Work.

K. Contractor shall restrict all Subcontractors, Suppliers, and such other individuals or entities performing or furnishing any of the Work from communicating with Engineer or Owner, except through Contractor or in case of an emergency, or as otherwise expressly allowed herein.

L. The divisions and sections of the Specifications and the identifications of any Drawings shall not control Contractor in dividing the Work among Subcontractors or Suppliers or delineating the Work to be performed by any specific trade.

M. All Work performed for Contractor by a Subcontractor or Supplier shall be pursuant to an appropriate contractual agreement that specifically binds the Subcontractor or Supplier to the applicable terms and conditions of the Contract Documents for the benefit of Owner and Engineer.

N. Owner may furnish to any Subcontractor or Supplier, to the extent practicable, information about amounts paid to Contractor on account of Work performed for Contractor by the particular Subcontractor or Supplier.

O. Nothing in the Contract Documents:

1. shall create for the benefit of any such Subcontractor, Supplier, or other individual or entity any contractual relationship between Owner or Engineer and any such Subcontractor, Supplier, or other individual or entity; nor

2. shall create any obligation on the part of Owner or Engineer to pay or to see to the payment of any money due any such Subcontractor, Supplier, or other individual or entity except as may otherwise be required by Laws and Regulations.

7.07 *Patent Fees and Royalties*

A. Contractor shall pay all license fees and royalties and assume all costs incident to the use in the performance of the Work or the incorporation in the Work of any invention, design, process, product, or device which is the subject of patent rights or copyrights held by others. If a particular invention, design, process, product, or device is specified in the Contract Documents for use in the performance of the Work and if, to the actual

Copyright © 2013 National Society of Professional Engineers, American Council of Engineering Companies, and American Society of Civil Engineers. All rights reserved.

knowledge of Owner or Engineer, its use is subject to patent rights or copyrights calling for the payment of any license fee or royalty to others, the existence of such rights shall be disclosed by Owner in the Contract Documents.

B. To the fullest extent permitted by Laws and Regulations, Owner shall indemnify and hold harmless Contractor, and its officers, directors, members, partners, employees, agents, consultants, and subcontractors from and against all claims, costs, losses, and damages (including but not limited to all fees and charges of engineers, architects, attorneys, and other professionals, and all court or arbitration or other dispute resolution costs) arising out of or relating to any infringement of patent rights or copyrights incident to the use in the performance of the Work or resulting from the incorporation in the Work of any invention, design, process, product, or device specified in the Contract Documents, but not identified as being subject to payment of any license fee or royalty to others required by patent rights or copyrights.

C. To the fullest extent permitted by Laws and Regulations, Contractor shall indemnify and hold harmless Owner and Engineer, and the officers, directors, members, partners, employees, agents, consultants and subcontractors of each and any of them from and against all claims, costs, losses, and damages (including but not limited to all fees and charges of engineers, architects, attorneys, and other professionals and all court or arbitration or other dispute resolution costs) arising out of or relating to any infringement of patent rights or copyrights incident to the use in the performance of the Work or resulting from the incorporation in the Work of any invention, design, process, product, or device not specified in the Contract Documents.

7.08 *Permits*

A. Unless otherwise provided in the Contract Documents, Contractor shall obtain and pay for all construction permits and licenses. Owner shall assist Contractor, when necessary, in obtaining such permits and licenses. Contractor shall pay all governmental charges and inspection fees necessary for the prosecution of the Work which are applicable at the time of the submission of Contractor's Bid (or when Contractor became bound under a negotiated contract). Owner shall pay all charges of utility owners for connections for providing permanent service to the Work

7.09 *Taxes*

A. Contractor shall pay all sales, consumer, use, and other similar taxes required to be paid by Contractor in accordance with the Laws and Regulations of the place of the Project which are applicable during the performance of the Work.

B. Owner is exempt from payment of sales and compensating use taxes of the State of Michigan and of cities and counties thereof on all materials to be incorporated into the Work.

1. Owner will furnish the required certificates of tax exemption to Contractor for use in the purchase of supplies and materials to be incorporated into the Work.

2. Owner's exemption does not apply to construction tools, machinery, equipment, or other property purchased by or leased by Contractor, or to supplies or materials not incorporated into the Work.

7.10 *Laws and Regulations*

A. Contractor shall give all notices required by and shall comply with all Laws and Regulations applicable to the performance of the Work. Except where otherwise expressly required by

Copyright © 2013 National Society of Professional Engineers, American Council of Engineering Companies, and American Society of Civil Engineers. All rights reserved.

applicable Laws and Regulations, neither Owner nor Engineer shall be responsible for monitoring Contractor's compliance with any Laws or Regulations.

B. If Contractor performs any Work or takes any other action knowing or having reason to know that it is contrary to Laws or Regulations, Contractor shall bear all resulting costs and losses, and shall indemnify and hold harmless Owner and Engineer, and the officers, directors, members, partners, employees, agents, consultants, and subcontractors of each and any of them from and against all claims, costs, losses, and damages (including but not limited to all fees and charges of engineers, architects, attorneys, and other professionals and all court or arbitration or other dispute resolution costs) arising out of or relating to such Work or other action. It shall not be Contractor's responsibility to make certain that the Work described in the Contract Documents is in accordance with Laws and Regulations, but this shall not relieve Contractor of Contractor's obligations under Paragraph 3.03.

C. Owner or Contractor may give notice to the other party of any changes after the submission of Contractor's Bid (or after the date when Contractor became bound under a negotiated contract) in Laws or Regulations having an effect on the cost or time of performance of the Work, including but not limited to changes in Laws or Regulations having an effect on procuring permits and on sales, use, value-added, consumption, and other similar taxes. If Owner and Contractor are unable to agree on entitlement to or on the amount or extent, if any, of any adjustment in Contract Price or Contract Times resulting from such changes, then within 30 days of such notice Contractor may submit a Change Proposal, or Owner may initiate a Claim.

7.11 *Record Documents*

A. Contractor shall maintain in a safe place at the Site one printed record copy of all Drawings, Specifications, Addenda, Change Orders, Work Change Directives, Field Orders, written interpretations and clarifications, and approved Shop Drawings. Contractor shall keep such record documents in good order and annotate them to show changes made during construction. These record documents, together with all approved Samples, will be available to Engineer for reference. Upon completion of the Work, Contractor shall deliver these record documents to Engineer.

7.12 *Safety and Protection*

A. Contractor shall be solely responsible for initiating, maintaining, and supervising all safety precautions and programs in connection with the Work. Such responsibility does not relieve Subcontractors of their responsibility for the safety of persons or property in the performance of their work, nor for compliance with applicable safety Laws and Regulations. Contractor shall take all necessary precautions for the safety of, and shall provide the necessary protection to prevent damage, injury, or loss to:

1. all persons on the Site or who may be affected by the Work;

2. all the Work and materials and equipment to be incorporated therein, whether in storage on or off the Site; and

3. other property at the Site or adjacent thereto, including trees, shrubs, lawns, walks, pavements, roadways, structures, other work in progress, utilities, and Underground Facilities not designated for removal, relocation, or replacement in the course of construction.

B. Contractor shall comply with all applicable Laws and Regulations relating to the safety of persons or property, or to the protection of persons or property from damage, injury, or loss; and shall erect and maintain all necessary safeguards for such safety and protection.

Copyright © 2013 National Society of Professional Engineers, American Council of Engineering Companies, and American Society of Civil Engineers. All rights reserved.

Contractor shall notify Owner; the owners of adjacent property, Underground Facilities, and other utilities; and other contractors and utility owners performing work at or adjacent to the Site, when prosecution of the Work may affect them, and shall cooperate with them in the protection, removal, relocation, and replacement of their property or work in progress.

C. Contractor shall comply with the applicable requirements of Owner's safety programs, if any. The Supplementary Conditions identify any Owner's safety programs that are applicable to the Work.

D. Contractor shall inform Owner and Engineer of the specific requirements of Contractor's safety program with which Owner's and Engineer's employees and representatives must comply while at the Site.

E. All damage, injury, or loss to any property referred to in Paragraph 7.12.A.2 or 7.12.A.3 caused, directly or indirectly, in whole or in part, by Contractor, any Subcontractor, Supplier, or any other individual or entity directly or indirectly employed by any of them to perform any of the Work, or anyone for whose acts any of them may be liable, shall be remedied by Contractor at its expense (except damage or loss attributable to the fault of Drawings or Specifications or to the acts or omissions of Owner or Engineer or anyone employed by any of them, or anyone for whose acts any of them may be liable, and not attributable, directly or indirectly, in whole or in part, to the fault or negligence of Contractor or any Subcontractor, Supplier, or other individual or entity directly or indirectly employed by any of them).

F. Contractor's duties and responsibilities for safety and protection shall continue until such time as all the Work is completed and Engineer has issued a notice to Owner and Contractor in accordance with Paragraph 15.06.B that the Work is acceptable (except as otherwise expressly provided in connection with Substantial Completion).

G. Contractor's duties and responsibilities for safety and protection shall resume whenever Contractor or any Subcontractor or Supplier returns to the Site to fulfill warranty or correction obligations, or to conduct other tasks arising from the Contract Documents.

7.13 *Safety Representative*

A. Contractor shall designate a qualified and experienced safety representative at the Site whose duties and responsibilities shall be the prevention of accidents and the maintaining and supervising of safety precautions and programs.

7.14 *Hazard Communication Programs*

A. Contractor shall be responsible for coordinating any exchange of material safety data sheets or other hazard communication information required to be made available to or exchanged between or among employers at the Site in accordance with Laws or Regulations.

7.15 *Emergencies*

A. In emergencies affecting the safety or protection of persons or the Work or property at the Site or adjacent thereto, Contractor is obligated to act to prevent threatened damage, injury, or loss. Contractor shall give Engineer prompt written notice if Contractor believes that any significant changes in the Work or variations from the Contract Documents have been caused thereby or are required as a result thereof. If Engineer determines that a change in the Contract Documents is required because of the action taken by Contractor in response to such an emergency, a Work Change Directive or Change Order will be issued.

Copyright © 2013 National Society of Professional Engineers, American Council of Engineering Companies, and American Society of Civil Engineers. All rights reserved.

7.16 *Shop Drawings, Samples, and Other Submittals*

A. *Shop Drawing and Sample Submittal Requirements*:

1. Before submitting a Shop Drawing or Sample, Contractor shall have:

a. reviewed and coordinated the Shop Drawing or Sample with other Shop Drawings and Samples and with the requirements of the Work and the Contract Documents;

b. determined and verified all field measurements, quantities, dimensions, specified performance and design criteria, installation requirements, materials, catalog numbers, and similar information with respect thereto;

c. determined and verified the suitability of all materials and equipment offered with respect to the indicated application, fabrication, shipping, handling, storage, assembly, and installation pertaining to the performance of the Work; and

d. determined and verified all information relative to Contractor's responsibilities for means, methods, techniques, sequences, and procedures of construction, and safety precautions and programs incident thereto.

2. Each submittal shall bear a stamp or specific written certification that Contractor has satisfied Contractor's obligations under the Contract Documents with respect to Contractor's review of that submittal, and that Contractor approves the submittal.

3. With each submittal, Contractor shall give Engineer specific written notice of any variations that the Shop Drawing or Sample may have from the requirements of the Contract Documents. This notice shall be set forth in a written communication separate from the Shop Drawings or Sample submittal; and, in addition, in the case of Shop Drawings by a specific notation made on each Shop Drawing submitted to Engineer for review and approval of each such variation.

B. *Submittal Procedures for Shop Drawings and Samples*: Contractor shall submit Shop Drawings and Samples to Engineer for review and approval in accordance with the accepted Schedule of Submittals. Each submittal will be identified as Engineer may require.

1. *Shop Drawings*:

a. Contractor shall submit the number of copies required in the Specifications.

b. Data shown on the Shop Drawings will be complete with respect to quantities, dimensions, specified performance and design criteria, materials, and similar data to show Engineer the services, materials, and equipment Contractor proposes to provide and to enable Engineer to review the information for the limited purposes required by Paragraph 7.16.D.

2. *Samples*:

a. Contractor shall submit the number of Samples required in the Specifications.

b. Contractor shall clearly identify each Sample as to material, Supplier, pertinent data such as catalog numbers, the use for which intended and other data as Engineer may require to enable Engineer to review the submittal for the limited purposes required by Paragraph 7.16.D.

3. Where a Shop Drawing or Sample is required by the Contract Documents or the Schedule of Submittals, any related Work performed prior to Engineer's review and

Copyright © 2013 National Society of Professional Engineers, American Council of Engineering Companies, and American Society of Civil Engineers. All rights reserved.

approval of the pertinent submittal will be at the sole expense and responsibility of Contractor.

C. *Other Submittals*: Contractor shall submit other submittals to Engineer in accordance with the accepted Schedule of Submittals, and pursuant to the applicable terms of the Specifications.

D. *Engineer's Review*:

1. Engineer will provide timely review of Shop Drawings and Samples in accordance with the Schedule of Submittals acceptable to Engineer. Engineer's review and approval will be only to determine if the items covered by the submittals will, after installation or incorporation in the Work, conform to the information given in the Contract Documents and be compatible with the design concept of the completed Project as a functioning whole as indicated by the Contract Documents.

2. Engineer's review and approval will not extend to means, methods, techniques, sequences, or procedures of construction or to safety precautions or programs incident thereto.

3. Engineer's review and approval of a separate item as such will not indicate approval of the assembly in which the item functions.

4. Engineer's review and approval of a Shop Drawing or Sample shall not relieve Contractor from responsibility for any variation from the requirements of the Contract Documents unless Contractor has complied with the requirements of Paragraph 7.16.A.3 and Engineer has given written approval of each such variation by specific written notation thereof incorporated in or accompanying the Shop Drawing or Sample. Engineer will document any such approved variation from the requirements of the Contract Documents in a Field Order.

5. Engineer's review and approval of a Shop Drawing or Sample shall not relieve Contractor from responsibility for complying with the requirements of Paragraph 7.16.A and B.

6. Engineer's review and approval of a Shop Drawing or Sample, or of a variation from the requirements of the Contract Documents, shall not, under any circumstances, change the Contract Times or Contract Price, unless such changes are included in a Change Order.

7. Neither Engineer's receipt, review, acceptance or approval of a Shop Drawing, Sample, or other submittal shall result in such item becoming a Contract Document.

8. Contractor shall perform the Work in compliance with the requirements and commitments set forth in approved Shop Drawings and Samples, subject to the provisions of Paragraph 7.16.D.4.

E. *Resubmittal Procedures*:

1. Contractor shall make corrections required by Engineer and shall return the required number of corrected copies of Shop Drawings and submit, as required, new Samples for review and approval. Contractor shall direct specific attention in writing to revisions other than the corrections called for by Engineer on previous submittals.

2. Contractor shall furnish required submittals with sufficient information and accuracy to obtain required approval of an item with no more than three submittals. Engineer will record Engineer's time for reviewing a fourth or subsequent submittal of a Shop

Copyright © 2013 National Society of Professional Engineers, American Council of Engineering Companies, and American Society of Civil Engineers. All rights reserved.

Drawing, sample, or other item requiring approval, and Contractor shall be responsible for Engineer's charges to Owner for such time. Owner may impose a set-off against payments due to Contractor to secure reimbursement for such charges.

3. If Contractor requests a change of a previously approved submittal item, Contractor shall be responsible for Engineer's charges to Owner for its review time, and Owner may impose a set-off against payments due to Contractor to secure reimbursement for such charges, unless the need for such change is beyond the control of Contractor.

7.17 *Contractor's General Warranty and Guarantee*

A. Contractor warrants and guarantees to Owner that all Work will be in accordance with the Contract Documents and will not be defective. Engineer and its officers, directors, members, partners, employees, agents, consultants, and subcontractors shall be entitled to rely on Contractor's warranty and guarantee.

B. Contractor's warranty and guarantee hereunder excludes defects or damage caused by:

1. abuse, modification, or improper maintenance or operation by persons other than Contractor, Subcontractors, Suppliers, or any other individual or entity for whom Contractor is responsible; or

2. normal wear and tear under normal usage.

C. Contractor's obligation to perform and complete the Work in accordance with the Contract Documents shall be absolute. None of the following will constitute an acceptance of Work that is not in accordance with the Contract Documents or a release of Contractor's obligation to perform the Work in accordance with the Contract Documents:

1. observations by Engineer;

2. recommendation by Engineer or payment by Owner of any progress or final payment;

3. the issuance of a certificate of Substantial Completion by Engineer or any payment related thereto by Owner;

4. use or occupancy of the Work or any part thereof by Owner;

5. any review and approval of a Shop Drawing or Sample submittal;

6. the issuance of a notice of acceptability by Engineer;

7. any inspection, test, or approval by others; or

8. any correction of defective Work by Owner.

D. If the Contract requires the Contractor to accept the assignment of a contract entered into by Owner, then the specific warranties, guarantees, and correction obligations contained in the assigned contract shall govern with respect to Contractor's performance obligations to Owner for the Work described in the assigned contract.

7.18 *Indemnification*

A. To the fullest extent permitted by Laws and Regulations, and in addition to any other obligations of Contractor under the Contract or otherwise, Contractor shall indemnify and hold harmless Owner and Engineer, and the officers, directors, members, partners, employees, agents, consultants and subcontractors of each and any of them from and against all claims, costs, losses, and damages (including but not limited to all fees and charges of engineers, architects, attorneys, and other professionals and all court or arbitration or other dispute resolution costs) arising out of or relating to the performance

Copyright © 2013 National Society of Professional Engineers, American Council of Engineering Companies, and American Society of Civil Engineers. All rights reserved.

of the Work, provided that any such claim, cost, loss, or damage is attributable to bodily injury, sickness, disease, or death, or to injury to or destruction of tangible property (other than the Work itself), including the loss of use resulting therefrom but only to the extent caused by any negligent act or omission of Contractor, any Subcontractor, any Supplier, or any individual or entity directly or indirectly employed by any of them to perform any of the Work or anyone for whose acts any of them may be liable.

B. In any and all claims against Owner or Engineer or any of their officers, directors, members, partners, employees, agents, consultants, or subcontractors by any employee (or the survivor or personal representative of such employee) of Contractor, any Subcontractor, any Supplier, or any individual or entity directly or indirectly employed by any of them to perform any of the Work, or anyone for whose acts any of them may be liable, the indemnification obligation under Paragraph 7.18.A shall not be limited in any way by any limitation on the amount or type of damages, compensation, or benefits payable by or for Contractor or any such Subcontractor, Supplier, or other individual or entity under workers' compensation acts, disability benefit acts, or other employee benefit acts.

C. The indemnification obligations of Contractor under Paragraph 7.18.A shall not extend to the liability of Engineer and Engineer's officers, directors, members, partners, employees, agents, consultants and subcontractors arising out of:

1. the preparation or approval of, or the failure to prepare or approve maps, Drawings, opinions, reports, surveys, Change Orders, designs, or Specifications; or

2. giving directions or instructions, or failing to give them, if that is the primary cause of the injury or damage.

7.19 *Delegation of Professional Design Services*

A. Contractor will not be required to provide professional design services unless such services are specifically required by the Contract Documents for a portion of the Work or unless such services are required to carry out Contractor's responsibilities for construction means, methods, techniques, sequences and procedures. Contractor shall not be required to provide professional services in violation of applicable Laws and Regulations.

B. If professional design services or certifications by a design professional related to systems, materials, or equipment are specifically required of Contractor by the Contract Documents, Owner and Engineer will specify all performance and design criteria that such services must satisfy. Contractor shall cause such services or certifications to be provided by a properly licensed professional, whose signature and seal shall appear on all drawings, calculations, specifications, certifications, and other submittals prepared by such professional. Shop Drawings and other submittals related to the Work designed or certified by such professional, if prepared by others, shall bear such professional's written approval when submitted to Engineer.

C. Owner and Engineer shall be entitled to rely upon the adequacy, accuracy, and completeness of the services, certifications, or approvals performed by such design professionals, provided Owner and Engineer have specified to Contractor all performance and design criteria that such services must satisfy.

D. Pursuant to this paragraph, Engineer's review and approval of design calculations and design drawings will be only for the limited purpose of checking for conformance with performance and design criteria given and the design concept expressed in the Contract Documents. Engineer's review and approval of Shop Drawings and other submittals (except

Copyright © 2013 National Society of Professional Engineers, American Council of Engineering Companies, and American Society of Civil Engineers. All rights reserved.

design calculations and design drawings) will be only for the purpose stated in Paragraph 7.16.D.1.

E. Contractor shall not be responsible for the adequacy of the performance or design criteria specified by Owner or Engineer.

ARTICLE 8 – OTHER WORK AT THE SITE

8.01 *Other Work*

A. In addition to and apart from the Work under the Contract Documents, the Owner may perform other work at or adjacent to the Site. Such other work may be performed by Owner's employees, or through contracts between the Owner and third parties. Owner may also arrange to have third-party utility owners perform work on their utilities and facilities at or adjacent to the Site.

B. If Owner performs other work at or adjacent to the Site with Owner's employees, or through contracts for such other work, then Owner shall give Contractor written notice thereof prior to starting any such other work. If Owner has advance information regarding the start of any utility work at or adjacent to the Site, Owner shall provide such information to Contractor.

C. Contractor shall afford each other contractor that performs such other work, each utility owner performing other work, and Owner, if Owner is performing other work with Owner's employees, proper and safe access to the Site, and provide a reasonable opportunity for the introduction and storage of materials and equipment and the execution of such other work. Contractor shall do all cutting, fitting, and patching of the Work that may be required to properly connect or otherwise make its several parts come together and properly integrate with such other work. Contractor shall not endanger any work of others by cutting, excavating, or otherwise altering such work; provided, however, that Contractor may cut or alter others' work with the written consent of Engineer and the others whose work will be affected.

D. If the proper execution or results of any part of Contractor's Work depends upon work performed by others under this Article 8, Contractor shall inspect such other work and promptly report to Engineer in writing any delays, defects, or deficiencies in such other work that render it unavailable or unsuitable for the proper execution and results of Contractor's Work. Contractor's failure to so report will constitute an acceptance of such other work as fit and proper for integration with Contractor's Work except for latent defects and deficiencies in such other work.

8.02 *Coordination*

A. If Owner intends to contract with others for the performance of other work at or adjacent to the Site, to perform other work at or adjacent to the Site with Owner's employees, or to arrange to have utility owners perform work at or adjacent to the Site, the following will be set forth in the Supplementary Conditions or provided to Contractor prior to the start of any such other work:

1. the identity of the individual or entity that will have authority and responsibility for coordination of the activities among the various contractors;

2. an itemization of the specific matters to be covered by such authority and responsibility; and

3. the extent of such authority and responsibilities.

EJCDC® C-700, Standard General Conditions of the Construction Contract.
Copyright © 2013 National Society of Professional Engineers, American Council of Engineering Companies, and American Society of Civil Engineers. All rights reserved.

B. Unless otherwise provided in the Supplementary Conditions, Owner shall have sole authority and responsibility for such coordination.

8.03 *Legal Relationships*

A. If, in the course of performing other work at or adjacent to the Site for Owner, the Owner's employees, any other contractor working for Owner, or any utility owner causes damage to the Work or to the property of Contractor or its Subcontractors, or delays, disrupts, interferes with, or increases the scope or cost of the performance of the Work, through actions or inaction, then Contractor shall be entitled to an equitable adjustment in the Contract Price or the Contract Times, or both. Contractor must submit any Change Proposal seeking an equitable adjustment in the Contract Price or the Contract Times under this paragraph within 30 days of the damaging, delaying, disrupting, or interfering event. The entitlement to, and extent of, any such equitable adjustment shall take into account information (if any) regarding such other work that was provided to Contractor in the Contract Documents prior to the submittal of the Bid or the final negotiation of the terms of the Contract. When applicable, any such equitable adjustment in Contract Price shall be conditioned on Contractor assigning to Owner all Contractor's rights against such other contractor or utility owner with respect to the damage, delay, disruption, or interference that is the subject of the adjustment. Contractor's entitlement to an adjustment of the Contract Times is conditioned on such adjustment being essential to Contractor's ability to complete the Work within the Contract Times.

B. Contractor shall take reasonable and customary measures to avoid damaging, delaying, disrupting, or interfering with the work of Owner, any other contractor, or any utility owner performing other work at or adjacent to the Site. If Contractor fails to take such measures and as a result damages, delays, disrupts, or interferes with the work of any such other contractor or utility owner, then Owner may impose a set-off against payments due to Contractor, and assign to such other contractor or utility owner the Owner's contractual rights against Contractor with respect to the breach of the obligations set forth in this paragraph.

C. When Owner is performing other work at or adjacent to the Site with Owner's employees, Contractor shall be liable to Owner for damage to such other work, and for the reasonable direct delay, disruption, and interference costs incurred by Owner as a result of Contractor's failure to take reasonable and customary measures with respect to Owner's other work. In response to such damage, delay, disruption, or interference, Owner may impose a set-off against payments due to Contractor.

D. If Contractor damages, delays, disrupts, or interferes with the work of any other contractor, or any utility owner performing other work at or adjacent to the Site, through Contractor's failure to take reasonable and customary measures to avoid such impacts, or if any claim arising out of Contractor's actions, inactions, or negligence in performance of the Work at or adjacent to the Site is made by any such other contractor or utility owner against Contractor, Owner, or Engineer, then Contractor shall (1) promptly attempt to settle the claim as to all parties through negotiations with such other contractor or utility owner, or otherwise resolve the claim by arbitration or other dispute resolution proceeding or at law, and (2) indemnify and hold harmless Owner and Engineer, and the officers, directors, members, partners, employees, agents, consultants and subcontractors of each and any of them from and against any such claims, and against all costs, losses, and damages (including but not limited to all fees and charges of engineers, architects, attorneys, and other professionals and all court or arbitration or other dispute resolution costs) arising out of or relating to such damage, delay, disruption, or interference.

Copyright © 2013 National Society of Professional Engineers, American Council of Engineering Companies, and American Society of Civil Engineers. All rights reserved.

ARTICLE 9 – OWNER'S RESPONSIBILITIES

9.01 *Communications to Contractor*

A. Except as otherwise provided in these General Conditions, Owner shall issue all communications to Contractor through Engineer.

9.02 *Replacement of Engineer*

A. Owner may at its discretion appoint an engineer to replace Engineer, provided Contractor makes no reasonable objection to the replacement engineer. The replacement engineer's status under the Contract Documents shall be that of the former Engineer.

9.03 *Furnish Data*

A. Owner shall promptly furnish the data required of Owner under the Contract Documents.

9.04 *Pay When Due*

A. Owner shall make payments to Contractor when they are due as provided in the Agreement.

9.05 *Lands and Easements; Reports, Tests, and Drawings*

A. Owner's duties with respect to providing lands and easements are set forth in Paragraph 5.01.

B. Owner's duties with respect to providing engineering surveys to establish reference points are set forth in Paragraph 4.03.

C. Article 5 refers to Owner's identifying and making available to Contractor copies of reports of explorations and tests of conditions at the Site, and drawings of physical conditions relating to existing surface or subsurface structures at the Site.

9.06 *Insurance*

A. Owner's responsibilities, if any, with respect to purchasing and maintaining liability and property insurance are set forth in Article 6.

9.07 *Change Orders*

A. Owner's responsibilities with respect to Change Orders are set forth in Article 11.

9.08 *Inspections, Tests, and Approvals*

A. Owner's responsibility with respect to certain inspections, tests, and approvals is set forth in Paragraph 14.02.B.

9.09 *Limitations on Owner's Responsibilities*

A. The Owner shall not supervise, direct, or have control or authority over, nor be responsible for, Contractor's means, methods, techniques, sequences, or procedures of construction, or the safety precautions and programs incident thereto, or for any failure of Contractor to comply with Laws and Regulations applicable to the performance of the Work. Owner will not be responsible for Contractor's failure to perform the Work in accordance with the Contract Documents.

9.10 *Undisclosed Hazardous Environmental Condition*

A. Owner's responsibility in respect to an undisclosed Hazardous Environmental Condition is set forth in Paragraph 5.06.

EJCDC® C-700, Standard General Conditions of the Construction Contract.
Copyright © 2013 National Society of Professional Engineers, American Council of Engineering Companies, and American Society of Civil Engineers. All rights reserved.

9.11 *Evidence of Financial Arrangements*

A. Upon request of Contractor, Owner shall furnish Contractor reasonable evidence that financial arrangements have been made to satisfy Owner's obligations under the Contract Documents (including obligations under proposed changes in the Work).

9.12 *Safety Programs*

A. While at the Site, Owner's employees and representatives shall comply with the specific applicable requirements of Contractor's safety programs of which Owner has been informed.

B. Owner shall furnish copies of any applicable Owner safety programs to Contractor.

ARTICLE 10 – ENGINEER'S STATUS DURING CONSTRUCTION

10.01 *Owner's Representative*

A. Engineer will be Owner's representative during the construction period. The duties and responsibilities and the limitations of authority of Engineer as Owner's representative during construction are set forth in the Contract.

10.02 *Visits to Site*

A. Engineer will make visits to the Site at intervals appropriate to the various stages of construction as Engineer deems necessary in order to observe as an experienced and qualified design professional the progress that has been made and the quality of the various aspects of Contractor's executed Work. Based on information obtained during such visits and observations, Engineer, for the benefit of Owner, will determine, in general, if the Work is proceeding in accordance with the Contract Documents. Engineer will not be required to make exhaustive or continuous inspections on the Site to check the quality or quantity of the Work. Engineer's efforts will be directed toward providing for Owner a greater degree of confidence that the completed Work will conform generally to the Contract Documents. On the basis of such visits and observations, Engineer will keep Owner informed of the progress of the Work and will endeavor to guard Owner against defective Work.

B. Engineer's visits and observations are subject to all the limitations on Engineer's authority and responsibility set forth in Paragraph 10.08. Particularly, but without limitation, during or as a result of Engineer's visits or observations of Contractor's Work, Engineer will not supervise, direct, control, or have authority over or be responsible for Contractor's means, methods, techniques, sequences, or procedures of construction, or the safety precautions and programs incident thereto, or for any failure of Contractor to comply with Laws and Regulations applicable to the performance of the Work.

10.03 *Project Representative*

A. If Owner and Engineer have agreed that Engineer will furnish a Resident Project Representative to represent Engineer at the Site and assist Engineer in observing the progress and quality of the Work, then the authority and responsibilities of any such Resident Project Representative will be as provided in the Supplementary Conditions, and limitations on the responsibilities thereof will be as provided in Paragraph 10.08. If Owner designates another representative or agent to represent Owner at the Site who is not Engineer's consultant, agent, or employee, the responsibilities and authority and limitations thereon of such other individual or entity will be as provided in the Supplementary Conditions.

Copyright © 2013 National Society of Professional Engineers, American Council of Engineering Companies, and American Society of Civil Engineers. All rights reserved.

B. On this Project, by agreement with the Owner, Engineer will not furnish a Resident Project Representative to represent Engineer at the Site or assist Engineer in observing the progress and quality of the Work

10.04 *Rejecting Defective Work*

A. Engineer has the authority to reject Work in accordance with Article 14.

10.05 *Shop Drawings, Change Orders and Payments*

A. Engineer's authority, and limitations thereof, as to Shop Drawings and Samples, are set forth in Paragraph 7.16.

B. Engineer's authority, and limitations thereof, as to design calculations and design drawings submitted in response to a delegation of professional design services, if any, are set forth in Paragraph 7.19.

C. Engineer's authority as to Change Orders is set forth in Article 11.

D. Engineer's authority as to Applications for Payment is set forth in Article 15.

10.06 *Determinations for Unit Price Work*

A. Engineer will determine the actual quantities and classifications of Unit Price Work performed by Contractor as set forth in Paragraph 13.03.

10.07 *Decisions on Requirements of Contract Documents and Acceptability of Work*

A. Engineer will render decisions regarding the requirements of the Contract Documents, and judge the acceptability of the Work, pursuant to the specific procedures set forth herein for initial interpretations, Change Proposals, and acceptance of the Work. In rendering such decisions and judgments, Engineer will not show partiality to Owner or Contractor, and will not be liable to Owner, Contractor, or others in connection with any proceedings, interpretations, decisions, or judgments conducted or rendered in good faith.

10.08 *Limitations on Engineer's Authority and Responsibilities*

A. Neither Engineer's authority or responsibility under this Article 10 or under any other provision of the Contract, nor any decision made by Engineer in good faith either to exercise or not exercise such authority or responsibility or the undertaking, exercise, or performance of any authority or responsibility by Engineer, shall create, impose, or give rise to any duty in contract, tort, or otherwise owed by Engineer to Contractor, any Subcontractor, any Supplier, any other individual or entity, or to any surety for or employee or agent of any of them.

B. Engineer will not supervise, direct, control, or have authority over or be responsible for Contractor's means, methods, techniques, sequences, or procedures of construction, or the safety precautions and programs incident thereto, or for any failure of Contractor to comply with Laws and Regulations applicable to the performance of the Work. Engineer will not be responsible for Contractor's failure to perform the Work in accordance with the Contract Documents.

C. Engineer will not be responsible for the acts or omissions of Contractor or of any Subcontractor, any Supplier, or of any other individual or entity performing any of the Work.

D. Engineer's review of the final Application for Payment and accompanying documentation and all maintenance and operating instructions, schedules, guarantees, bonds, certificates of inspection, tests and approvals, and other documentation required to be delivered by

Copyright © 2013 National Society of Professional Engineers, American Council of Engineering Companies, and American Society of Civil Engineers. All rights reserved.

Paragraph 15.06.A will only be to determine generally that their content complies with the requirements of, and in the case of certificates of inspections, tests, and approvals, that the results certified indicate compliance with the Contract Documents.

E. The limitations upon authority and responsibility set forth in this Paragraph 10.08 shall also apply to the Resident Project Representative, if any.

10.09 *Compliance with Safety Program*

A. While at the Site, Engineer's employees and representatives will comply with the specific applicable requirements of Owner's and Contractor's safety programs (if any) of which Engineer has been informed.

ARTICLE 11 – AMENDING THE CONTRACT DOCUMENTS; CHANGES IN THE WORK

11.01 *Amending and Supplementing Contract Documents*

A. The Contract Documents may be amended or supplemented by a Change Order, a Work Change Directive, or a Field Order.

1. *Change Orders*:

a. If an amendment or supplement to the Contract Documents includes a change in the Contract Price or the Contract Times, such amendment or supplement must be set forth in a Change Order. A Change Order also may be used to establish amendments and supplements of the Contract Documents that do not affect the Contract Price or Contract Times.

b. Owner and Contractor may amend those terms and conditions of the Contract Documents that do not involve (1) the performance or acceptability of the Work, (2) the design (as set forth in the Drawings, Specifications, or otherwise), or (3) other engineering or technical matters, without the recommendation of the Engineer. Such an amendment shall be set forth in a Change Order.

2. *Work Change Directives*: A Work Change Directive will not change the Contract Price or the Contract Times but is evidence that the parties expect that the modification ordered or documented by a Work Change Directive will be incorporated in a subsequently issued Change Order, following negotiations by the parties as to the Work Change Directive's effect, if any, on the Contract Price and Contract Times; or, if negotiations are unsuccessful, by a determination under the terms of the Contract Documents governing adjustments, expressly including Paragraph 11.04 regarding change of Contract Price. Contractor must submit any Change Proposal seeking an adjustment of the Contract Price or the Contract Times, or both, no later than 30 days after the completion of the Work set out in the Work Change Directive. Owner must submit any Claim seeking an adjustment of the Contract Price or the Contract Times, or both, no later than 60 days after issuance of the Work Change Directive.

3. *Field Orders*: Engineer may authorize minor changes in the Work if the changes do not involve an adjustment in the Contract Price or the Contract Times and are compatible with the design concept of the completed Project as a functioning whole as indicated by the Contract Documents. Such changes will be accomplished by a Field Order and will be binding on Owner and also on Contractor, which shall perform the Work involved promptly. If Contractor believes that a Field Order justifies an adjustment in the Contract Price or Contract Times, or both, then before proceeding with the Work at issue, Contractor shall submit a Change Proposal as provided herein.

Copyright © 2013 National Society of Professional Engineers, American Council of Engineering Companies, and American Society of Civil Engineers. All rights reserved.

11.02 *Owner-Authorized Changes in the Work*

A. Without invalidating the Contract and without notice to any surety, Owner may, at any time or from time to time, order additions, deletions, or revisions in the Work. Such changes shall be supported by Engineer's recommendation, to the extent the change involves the design (as set forth in the Drawings, Specifications, or otherwise), or other engineering or technical matters. Such changes may be accomplished by a Change Order, if Owner and Contractor have agreed as to the effect, if any, of the changes on Contract Times or Contract Price; or by a Work Change Directive. Upon receipt of any such document, Contractor shall promptly proceed with the Work involved; or, in the case of a deletion in the Work, promptly cease construction activities with respect to such deleted Work. Added or revised Work shall be performed under the applicable conditions of the Contract Documents. Nothing in this paragraph shall obligate Contractor to undertake work that Contractor reasonably concludes cannot be performed in a manner consistent with Contractor's safety obligations under the Contract Documents or Laws and Regulations.

11.03 *Unauthorized Changes in the Work*

A. Contractor shall not be entitled to an increase in the Contract Price or an extension of the Contract Times with respect to any work performed that is not required by the Contract Documents, as amended, modified, or supplemented, except in the case of an emergency as provided in Paragraph 7.15 or in the case of uncovering Work as provided in Paragraph 14.05.

11.04 *Change of Contract Price*

A. The Contract Price may only be changed by a Change Order. Any Change Proposal for an adjustment in the Contract Price shall comply with the provisions of Paragraph 11.06. Any Claim for an adjustment of Contract Price shall comply with the provisions of Article 12.

B. An adjustment in the Contract Price will be determined as follows:

1. where the Work involved is covered by unit prices contained in the Contract Documents, then by application of such unit prices to the quantities of the items involved (subject to the provisions of Paragraph 13.03); or

2. where the Work involved is not covered by unit prices contained in the Contract Documents, then by a mutually agreed lump sum (which may include an allowance for overhead and profit not necessarily in accordance with Paragraph 11.04.C.2); or

3. where the Work involved is not covered by unit prices contained in the Contract Documents and the parties do not reach mutual agreement to a lump sum, then on the basis of the Cost of the Work (determined as provided in Paragraph 13.01) plus a Contractor's fee for overhead and profit (determined as provided in Paragraph 11.04.C).

C. *Contractor's Fee*: When applicable, the Contractor's fee for overhead and profit shall be determined as follows:

1. a mutually acceptable fixed fee; or

2. if a fixed fee is not agreed upon, then a fee based on the following percentages of the various portions of the Cost of the Work:

a. for costs incurred under Paragraphs 13.01.B.1 and 13.01.B.2, the Contractor's fee shall be 15 percent;

Copyright © 2013 National Society of Professional Engineers, American Council of Engineering Companies, and American Society of Civil Engineers. All rights reserved.

b. for costs incurred under Paragraph 13.01.B.3, the Contractor's fee shall be five percent;

c. where one or more tiers of subcontracts are on the basis of Cost of the Work plus a fee and no fixed fee is agreed upon, the intent of Paragraphs 11.01.C.2.a and 11.01.C.2.b is that the Contractor's fee shall be based on: (1) a fee of 15 percent of the costs incurred under Paragraphs 13.01.A.1 and 13.01.A.2 by the Subcontractor that actually performs the Work, at whatever tier, and (2) with respect to Contractor itself and to any Subcontractors of a tier higher than that of the Subcontractor that actually performs the Work, a fee of five percent of the amount (fee plus underlying costs incurred) attributable to the next lower tier Subcontractor; provided, however, that for any such subcontracted work the maximum total fee to be paid by Owner shall be no greater than 27 percent of the costs incurred by the Subcontractor that actually performs the work;

d. no fee shall be payable on the basis of costs itemized under Paragraphs 13.01.B.4, 13.01.B.5, and 13.01.C;

e. the amount of credit to be allowed by Contractor to Owner for any change which results in a net decrease in cost will be the amount of the actual net decrease in cost plus a deduction in Contractor's fee by an amount equal to five percent of such net decrease; and

f. when both additions and credits are involved in any one change, the adjustment in Contractor's fee shall be computed on the basis of the net change in accordance with Paragraphs 11.04.C.2.a through 11.04.C.2.e, inclusive.

11.05 *Change of Contract Times*

A. The Contract Times may only be changed by a Change Order. Any Change Proposal for an adjustment in the Contract Times shall comply with the provisions of Paragraph 11.06. Any Claim for an adjustment in the Contract Times shall comply with the provisions of Article 12.

B. An adjustment of the Contract Times shall be subject to the limitations set forth in Paragraph 4.05, concerning delays in Contractor's progress.

11.06 *Change Proposals*

A. Contractor shall submit a Change Proposal to Engineer to request an adjustment in the Contract Times or Contract Price; appeal an initial decision by Engineer concerning the requirements of the Contract Documents or relating to the acceptability of the Work under the Contract Documents; contest a set-off against payment due; or seek other relief under the Contract. The Change Proposal shall specify any proposed change in Contract Times or Contract Price, or both, or other proposed relief, and explain the reason for the proposed change, with citations to any governing or applicable provisions of the Contract Documents.

1. *Procedures*: Contractor shall submit each Change Proposal to Engineer promptly (but in no event later than 30 days) after the start of the event giving rise thereto, or after such initial decision. The Contractor shall submit supporting data, including the proposed change in Contract Price or Contract Time (if any), to the Engineer and Owner within 15 days after the submittal of the Change Proposal. The supporting data shall be accompanied by a written statement that the supporting data are accurate and complete, and that any requested time or price adjustment is the entire adjustment to which Contractor believes it is entitled as a result of said event.

EJCDC® C-700, Standard General Conditions of the Construction Contract.
Copyright © 2013 National Society of Professional Engineers, American Council of Engineering Companies, and American Society of Civil Engineers. All rights reserved.

Engineer will advise Owner regarding the Change Proposal, and consider any comments or response from Owner regarding the Change Proposal.

2. *Engineer's Action*: Engineer will review each Change Proposal and, within 30 days after receipt of the Contractor's supporting data, either deny the Change Proposal in whole, approve it in whole, or deny it in part and approve it in part. Such actions shall be in writing, with a copy provided to Owner and Contractor. If Engineer does not take action on the Change Proposal within 30 days, then either Owner or Contractor may at any time thereafter submit a letter to the other party indicating that as a result of Engineer's inaction the Change Proposal is deemed denied, thereby commencing the time for appeal of the denial under Article 12.

3. *Binding Decision*: Engineer's decision will be final and binding upon Owner and Contractor, unless Owner or Contractor appeals the decision by filing a Claim under Article 12.

B. *Resolution of Certain Change Proposals*: If the Change Proposal does not involve the design (as set forth in the Drawings, Specifications, or otherwise), the acceptability of the Work, or other engineering or technical matters, then Engineer will notify the parties that the Engineer is unable to resolve the Change Proposal. For purposes of further resolution of such a Change Proposal, such notice shall be deemed a denial, and Contractor may choose to seek resolution under the terms of Article 12.

11.07 *Execution of Change Orders*

A. Owner and Contractor shall execute appropriate Change Orders covering:

1. changes in the Contract Price or Contract Times which are agreed to by the parties, including any undisputed sum or amount of time for Work actually performed in accordance with a Work Change Directive;

2. changes in Contract Price resulting from an Owner set-off, unless Contractor has duly contested such set-off;

3. changes in the Work which are: (a) ordered by Owner pursuant to Paragraph 11.02, (b) required because of Owner's acceptance of defective Work under Paragraph 14.04 or Owner's correction of defective Work under Paragraph 14.07, or (c) agreed to by the parties, subject to the need for Engineer's recommendation if the change in the Work involves the design (as set forth in the Drawings, Specifications, or otherwise), or other engineering or technical matters; and

4. changes in the Contract Price or Contract Times, or other changes, which embody the substance of any final and binding results under Paragraph 11.06, or Article 12.

B. If Owner or Contractor refuses to execute a Change Order that is required to be executed under the terms of this Paragraph 11.07, it shall be deemed to be of full force and effect, as if fully executed.

11.08 *Notification to Surety*

A. If the provisions of any bond require notice to be given to a surety of any change affecting the general scope of the Work or the provisions of the Contract Documents (including, but not limited to, Contract Price or Contract Times), the giving of any such notice will be Contractor's responsibility. The amount of each applicable bond will be adjusted to reflect the effect of any such change.

Copyright © 2013 National Society of Professional Engineers, American Council of Engineering Companies, and American Society of Civil Engineers. All rights reserved.

ARTICLE 12 – CLAIMS

12.01 *Claims*

A. *Claims Process*: The following disputes between Owner and Contractor shall be submitted to the Claims process set forth in this Article:

1. Appeals by Owner or Contractor of Engineer's decisions regarding Change Proposals;

2. Owner demands for adjustments in the Contract Price or Contract Times, or other relief under the Contract Documents; and

3. Disputes that Engineer has been unable to address because they do not involve the design (as set forth in the Drawings, Specifications, or otherwise), the acceptability of the Work, or other engineering or technical matters.

B. *Submittal of Claim*: The party submitting a Claim shall deliver it directly to the other party to the Contract promptly (but in no event later than 30 days) after the start of the event giving rise thereto; in the case of appeals regarding Change Proposals within 30 days of the decision under appeal. The party submitting the Claim shall also furnish a copy to the Engineer, for its information only. The responsibility to substantiate a Claim shall rest with the party making the Claim. In the case of a Claim by Contractor seeking an increase in the Contract Times or Contract Price, or both, Contractor shall certify that the Claim is made in good faith, that the supporting data are accurate and complete, and that to the best of Contractor's knowledge and belief the amount of time or money requested accurately reflects the full amount to which Contractor is entitled.

C. *Review and Resolution*: The party receiving a Claim shall review it thoroughly, giving full consideration to its merits. The two parties shall seek to resolve the Claim through the exchange of information and direct negotiations. The parties may extend the time for resolving the Claim by mutual agreement. All actions taken on a Claim shall be stated in writing and submitted to the other party, with a copy to Engineer.

D. *Mediation*:

1. At any time after initiation of a Claim, Owner and Contractor may mutually agree to mediation of the underlying dispute. The agreement to mediate shall stay the Claim submittal and response process.

2. If Owner and Contractor agree to mediation, then after 60 days from such agreement, either Owner or Contractor may unilaterally terminate the mediation process, and the Claim submittal and decision process shall resume as of the date of the termination. If the mediation proceeds but is unsuccessful in resolving the dispute, the Claim submittal and decision process shall resume as of the date of the conclusion of the mediation, as determined by the mediator.

3. Owner and Contractor shall each pay one-half of the mediator's fees and costs.

E. *Partial Approval*: If the party receiving a Claim approves the Claim in part and denies it in part, such action shall be final and binding unless within 30 days of such action the other party invokes the procedure set forth in Article 17 for final resolution of disputes.

F. *Denial of Claim*: If efforts to resolve a Claim are not successful, the party receiving the Claim may deny it by giving written notice of denial to the other party. If the receiving party does not take action on the Claim within 90 days, then either Owner or Contractor may at any time thereafter submit a letter to the other party indicating that as a result of the inaction, the Claim is deemed denied, thereby commencing the time for appeal of the denial. A

Copyright © 2013 National Society of Professional Engineers, American Council of Engineering Companies, and American Society of Civil Engineers. All rights reserved.

denial of the Claim shall be final and binding unless within 30 days of the denial the other party invokes the procedure set forth in Article 17 for the final resolution of disputes.

G. *Final and Binding Results*: If the parties reach a mutual agreement regarding a Claim, whether through approval of the Claim, direct negotiations, mediation, or otherwise; or if a Claim is approved in part and denied in part, or denied in full, and such actions become final and binding; then the results of the agreement or action on the Claim shall be incorporated in a Change Order to the extent they affect the Contract, including the Work, the Contract Times, or the Contract Price.

ARTICLE 13 – COST OF THE WORK; ALLOWANCES; UNIT PRICE WORK

13.01 *Cost of the Work*

A. *Purposes for Determination of Cost of the Work*: The term Cost of the Work means the sum of all costs necessary for the proper performance of the Work at issue, as further defined below. The provisions of this Paragraph 13.01 are used for two distinct purposes:

1. To determine Cost of the Work when Cost of the Work is a component of the Contract Price, under cost-plus-fee, time-and-materials, or other cost-based terms; or

2. To determine the value of a Change Order, Change Proposal, Claim, set-off, or other adjustment in Contract Price. When the value of any such adjustment is determined on the basis of Cost of the Work, Contractor is entitled only to those additional or incremental costs required because of the change in the Work or because of the event giving rise to the adjustment.

B. *Costs Included*: Except as otherwise may be agreed to in writing by Owner, costs included in the Cost of the Work shall be in amounts no higher than those prevailing in the locality of the Project, shall not include any of the costs itemized in Paragraph 13.01.C, and shall include only the following items:

1. Payroll costs for employees in the direct employ of Contractor in the performance of the Work under schedules of job classifications agreed upon by Owner and Contractor. Such employees shall include, without limitation, superintendents, foremen, and other personnel employed full time on the Work. Payroll costs for employees not employed full time on the Work shall be apportioned on the basis of their time spent on the Work. Payroll costs shall include, but not be limited to, salaries and wages plus the cost of fringe benefits, which shall include social security contributions, unemployment, excise, and payroll taxes, workers' compensation, health and retirement benefits, bonuses, sick leave, and vacation and holiday pay applicable thereto. The expenses of performing Work outside of regular working hours, on Saturday, Sunday, or legal holidays, shall be included in the above to the extent authorized by Owner.

2. Cost of all materials and equipment furnished and incorporated in the Work, including costs of transportation and storage thereof, and Suppliers' field services required in connection therewith. All cash discounts shall accrue to Contractor unless Owner deposits funds with Contractor with which to make payments, in which case the cash discounts shall accrue to Owner. All trade discounts, rebates, and refunds and returns from sale of surplus materials and equipment shall accrue to Owner, and Contractor shall make provisions so that they may be obtained.

3. Payments made by Contractor to Subcontractors for Work performed by Subcontractors. If required by Owner, Contractor shall obtain competitive bids from

EJCDC® C-700, Standard General Conditions of the Construction Contract.
Copyright © 2013 National Society of Professional Engineers, American Council of Engineering Companies, and American Society of Civil Engineers. All rights reserved.

subcontractors acceptable to Owner and Contractor and shall deliver such bids to Owner, who will then determine, with the advice of Engineer, which bids, if any, will be acceptable. If any subcontract provides that the Subcontractor is to be paid on the basis of Cost of the Work plus a fee, the Subcontractor's Cost of the Work and fee shall be determined in the same manner as Contractor's Cost of the Work and fee as provided in this Paragraph 13.01.

4. Costs of special consultants (including but not limited to engineers, architects, testing laboratories, surveyors, attorneys, and accountants) employed for services specifically related to the Work.

5. Supplemental costs including the following:

   a. The proportion of necessary transportation, travel, and subsistence expenses of Contractor's employees incurred in discharge of duties connected with the Work.

   b. Cost, including transportation and maintenance, of all materials, supplies, equipment, machinery, appliances, office, and temporary facilities at the Site, and hand tools not owned by the workers, which are consumed in the performance of the Work, and cost, less market value, of such items used but not consumed which remain the property of Contractor.

   c. Construction Equipment and Machinery:

      1) Rentals of all construction equipment and machinery, and the parts thereof, in accordance with rental agreements approved by Owner with the advice of Engineer, and the costs of transportation, loading, unloading, assembly, dismantling, and removal thereof. All such costs shall be in accordance with the terms of said rental agreements. The rental of any such equipment, machinery, or parts shall cease when the use thereof is no longer necessary for the Work.

      2) Costs for equipment and machinery owned by Contractor will be paid at a rate shown for such equipment in the approved MDOT State of Michigan Equipment Rate Schedule for Equipment. An hourly rate will be computed by dividing the monthly rates by 176. These computed rates will include all operating costs. Costs will include the time the equipment or machinery is in use on the changed Work and the costs of transportation, loading, unloading, assembly, dismantling, and removal when directly attributable to the changed Work. The cost of any such equipment or machinery, or parts thereof, shall cease to accrue when the use thereof is no longer necessary for the changed Work. Equipment or machinery with a value of less than $1,000 will be considered small tools.

   d. Rentals of all construction equipment and machinery, and the parts thereof, whether rented from Contractor or others in accordance with rental agreements approved by Owner with the advice of Engineer, and the costs of transportation, loading, unloading, assembly, dismantling, and removal thereof. All such costs shall be in accordance with the terms of said rental agreements. The rental of any such equipment, machinery, or parts shall cease when the use thereof is no longer necessary for the Work.

   e. Sales, consumer, use, and other similar taxes related to the Work, and for which Contractor is liable, as imposed by Laws and Regulations.

   f. Deposits lost for causes other than negligence of Contractor, any Subcontractor, or anyone directly or indirectly employed by any of them or for whose acts any of them may be liable, and royalty payments and fees for permits and licenses.

Copyright © 2013 National Society of Professional Engineers, American Council of Engineering Companies, and American Society of Civil Engineers. All rights reserved.

g. Losses and damages (and related expenses) caused by damage to the Work, not compensated by insurance or otherwise, sustained by Contractor in connection with the performance of the Work (except losses and damages within the deductible amounts of property insurance established in accordance with Paragraph 6.05), provided such losses and damages have resulted from causes other than the negligence of Contractor, any Subcontractor, or anyone directly or indirectly employed by any of them or for whose acts any of them may be liable. Such losses shall include settlements made with the written consent and approval of Owner. No such losses, damages, and expenses shall be included in the Cost of the Work for the purpose of determining Contractor's fee.

h. The cost of utilities, fuel, and sanitary facilities at the Site.

i. Minor expenses such as communication service at the Site, express and courier services, and similar petty cash items in connection with the Work.

j. The costs of premiums for all bonds and insurance that Contractor is required by the Contract Documents to purchase and maintain.

C. *Costs Excluded*: The term Cost of the Work shall not include any of the following items:

1. Payroll costs and other compensation of Contractor's officers, executives, principals (of partnerships and sole proprietorships), general managers, safety managers, engineers, architects, estimators, attorneys, auditors, accountants, purchasing and contracting agents, expediters, timekeepers, clerks, and other personnel employed by Contractor, whether at the Site or in Contractor's principal or branch office for general administration of the Work and not specifically included in the agreed upon schedule of job classifications referred to in Paragraph 13.01.B.1 or specifically covered by Paragraph 13.01.B.4. The payroll costs and other compensation excluded here are to be considered administrative costs covered by the Contractor's fee.

2. Expenses of Contractor's principal and branch offices other than Contractor's office at the Site.

3. Any part of Contractor's capital expenses, including interest on Contractor's capital employed for the Work and charges against Contractor for delinquent payments.

4. Costs due to the negligence of Contractor, any Subcontractor, or anyone directly or indirectly employed by any of them or for whose acts any of them may be liable, including but not limited to, the correction of defective Work, disposal of materials or equipment wrongly supplied, and making good any damage to property.

5. Other overhead or general expense costs of any kind and the costs of any item not specifically and expressly included in Paragraph 13.01.B.

D. *Contractor's Fee*: When the Work as a whole is performed on the basis of cost-plus, Contractor's fee shall be determined as set forth in the Agreement. When the value of any Work covered by a Change Order, Change Proposal, Claim, set-off, or other adjustment in Contract Price is determined on the basis of Cost of the Work, Contractor's fee shall be determined as set forth in Paragraph 11.04.C.

E. *Documentation*: Whenever the Cost of the Work for any purpose is to be determined pursuant to this Article 13, Contractor will establish and maintain records thereof in accordance with generally accepted accounting practices and submit in a form acceptable to Engineer an itemized cost breakdown together with supporting data.

Copyright © 2013 National Society of Professional Engineers, American Council of Engineering Companies, and American Society of Civil Engineers. All rights reserved.

13.02 *Allowances*

A. It is understood that Contractor has included in the Contract Price all allowances so named in the Contract Documents and shall cause the Work so covered to be performed for such sums and by such persons or entities as may be acceptable to Owner and Engineer.

B. *Cash Allowances*: Contractor agrees that:

1. the cash allowances include the cost to Contractor (less any applicable trade discounts) of materials and equipment required by the allowances to be delivered at the Site, and all applicable taxes; and

2. Contractor's costs for unloading and handling on the Site, labor, installation, overhead, profit, and other expenses contemplated for the cash allowances have been included in the Contract Price and not in the allowances, and no demand for additional payment on account of any of the foregoing will be valid.

C. *Contingency Allowance*: Contractor agrees that a contingency allowance, if any, is for the sole use of Owner to cover unanticipated costs.

D. Prior to final payment, an appropriate Change Order will be issued as recommended by Engineer to reflect actual amounts due Contractor on account of Work covered by allowances, and the Contract Price shall be correspondingly adjusted.

13.03 *Unit Price Work*

A. Where the Contract Documents provide that all or part of the Work is to be Unit Price Work, initially the Contract Price will be deemed to include for all Unit Price Work an amount equal to the sum of the unit price for each separately identified item of Unit Price Work times the estimated quantity of each item as indicated in the Agreement.

B. The estimated quantities of items of Unit Price Work are not guaranteed and are solely for the purpose of comparison of Bids and determining an initial Contract Price. Payments to Contractor for Unit Price Work will be based on actual quantities.

C. Each unit price will be deemed to include an amount considered by Contractor to be adequate to cover Contractor's overhead and profit for each separately identified item.

D. Engineer will determine the actual quantities and classifications of Unit Price Work performed by Contractor. Engineer will review with Contractor the Engineer's preliminary determinations on such matters before rendering a written decision thereon (by recommendation of an Application for Payment or otherwise). Engineer's written decision thereon will be final and binding (except as modified by Engineer to reflect changed factual conditions or more accurate data) upon Owner and Contractor, subject to the provisions of the following paragraph.

E. Within 30 days of Engineer's written decision under the preceding paragraph, Contractor may submit a Change Proposal, or Owner may file a Claim, seeking an adjustment in the Contract Price if:

1. the quantity of any item of Unit Price Work performed by Contractor differs materially and significantly from the estimated quantity of such item indicated in the Agreement;

2. there is no corresponding adjustment with respect to any other item of Work; and

3. Contractor believes that it is entitled to an increase in Contract Price as a result of having incurred additional expense or Owner believes that Owner is entitled to a

Copyright © 2013 National Society of Professional Engineers, American Council of Engineering Companies, and American Society of Civil Engineers. All rights reserved.

decrease in Contract Price, and the parties are unable to agree as to the amount of any such increase or decrease.

ARTICLE 14 – TESTS AND INSPECTIONS; CORRECTION, REMOVAL OR ACCEPTANCE OF DEFECTIVE WORK

14.01 *Access to Work*

A. Owner, Engineer, their consultants and other representatives and personnel of Owner, independent testing laboratories, and authorities having jurisdiction will have access to the Site and the Work at reasonable times for their observation, inspection, and testing. Contractor shall provide them proper and safe conditions for such access and advise them of Contractor's safety procedures and programs so that they may comply therewith as applicable.

14.02 *Tests, Inspections, and Approvals*

A. Contractor shall give Engineer timely notice of readiness of the Work (or specific parts thereof) for all required inspections and tests, and shall cooperate with inspection and testing personnel to facilitate required inspections and tests.

B. Owner shall retain and pay for the services of an independent inspector, testing laboratory, or other qualified individual or entity to perform all inspections and tests expressly required by the Contract Documents to be furnished and paid for by Owner, except that costs incurred in connection with tests or inspections of covered Work shall be governed by the provisions of Paragraph 14.05.

C. If Laws or Regulations of any public body having jurisdiction require any Work (or part thereof) specifically to be inspected, tested, or approved by an employee or other representative of such public body, Contractor shall assume full responsibility for arranging and obtaining such inspections, tests, or approvals, pay all costs in connection therewith, and furnish Engineer the required certificates of inspection or approval.

D. Contractor shall be responsible for arranging, obtaining, and paying for all inspections and tests required:

1. by the Contract Documents, unless the Contract Documents expressly allocate responsibility for a specific inspection or test to Owner;

2. to attain Owner's and Engineer's acceptance of materials or equipment to be incorporated in the Work;

3. by manufacturers of equipment furnished under the Contract Documents;

4. for testing, adjusting, and balancing of mechanical, electrical, and other equipment to be incorporated into the Work; and

5. for acceptance of materials, mix designs, or equipment submitted for approval prior to Contractor's purchase thereof for incorporation in the Work.

Such inspections and tests shall be performed by independent inspectors, testing laboratories, or other qualified individuals or entities acceptable to Owner and Engineer.

E. If the Contract Documents require the Work (or part thereof) to be approved by Owner, Engineer, or another designated individual or entity, then Contractor shall assume full responsibility for arranging and obtaining such approvals.

Copyright © 2013 National Society of Professional Engineers, American Council of Engineering Companies, and American Society of Civil Engineers. All rights reserved.

F. If any Work (or the work of others) that is to be inspected, tested, or approved is covered by Contractor without written concurrence of Engineer, Contractor shall, if requested by Engineer, uncover such Work for observation. Such uncovering shall be at Contractor's expense unless Contractor had given Engineer timely notice of Contractor's intention to cover the same and Engineer had not acted with reasonable promptness in response to such notice.

14.03 *Defective Work*

A. *Contractor's Obligation*: It is Contractor's obligation to assure that the Work is not defective.

B. *Engineer's Authority*: Engineer has the authority to determine whether Work is defective, and to reject defective Work.

C. *Notice of Defects*: Prompt notice of all defective Work of which Owner or Engineer has actual knowledge will be given to Contractor.

D. *Correction, or Removal and Replacement*: Promptly after receipt of written notice of defective Work, Contractor shall correct all such defective Work, whether or not fabricated, installed, or completed, or, if Engineer has rejected the defective Work, remove it from the Project and replace it with Work that is not defective.

E. *Preservation of Warranties*: When correcting defective Work, Contractor shall take no action that would void or otherwise impair Owner's special warranty and guarantee, if any, on said Work.

F. *Costs and Damages*: In addition to its correction, removal, and replacement obligations with respect to defective Work, Contractor shall pay all claims, costs, losses, and damages arising out of or relating to defective Work, including but not limited to the cost of the inspection, testing, correction, removal, replacement, or reconstruction of such defective Work, fines levied against Owner by governmental authorities because the Work is defective, and the costs of repair or replacement of work of others resulting from defective Work. Prior to final payment, if Owner and Contractor are unable to agree as to the measure of such claims, costs, losses, and damages resulting from defective Work, then Owner may impose a reasonable set-off against payments due under Article 15.

14.04 *Acceptance of Defective Work*

A. If, instead of requiring correction or removal and replacement of defective Work, Owner prefers to accept it, Owner may do so (subject, if such acceptance occurs prior to final payment, to Engineer's confirmation that such acceptance is in general accord with the design intent and applicable engineering principles, and will not endanger public safety). Contractor shall pay all claims, costs, losses, and damages attributable to Owner's evaluation of and determination to accept such defective Work (such costs to be approved by Engineer as to reasonableness), and for the diminished value of the Work to the extent not otherwise paid by Contractor. If any such acceptance occurs prior to final payment, the necessary revisions in the Contract Documents with respect to the Work shall be incorporated in a Change Order. If the parties are unable to agree as to the decrease in the Contract Price, reflecting the diminished value of Work so accepted, then Owner may impose a reasonable set-off against payments due under Article 15. If the acceptance of defective Work occurs after final payment, Contractor shall pay an appropriate amount to Owner.

Copyright © 2013 National Society of Professional Engineers, American Council of Engineering Companies, and American Society of Civil Engineers. All rights reserved.

14.05 *Uncovering Work*

A. Engineer has the authority to require special inspection or testing of the Work, whether or not the Work is fabricated, installed, or completed.

B. If any Work is covered contrary to the written request of Engineer, then Contractor shall, if requested by Engineer, uncover such Work for Engineer's observation, and then replace the covering, all at Contractor's expense.

C. If Engineer considers it necessary or advisable that covered Work be observed by Engineer or inspected or tested by others, then Contractor, at Engineer's request, shall uncover, expose, or otherwise make available for observation, inspection, or testing as Engineer may require, that portion of the Work in question, and provide all necessary labor, material, and equipment.

1. If it is found that the uncovered Work is defective, Contractor shall be responsible for all claims, costs, losses, and damages arising out of or relating to such uncovering, exposure, observation, inspection, and testing, and of satisfactory replacement or reconstruction (including but not limited to all costs of repair or replacement of work of others); and pending Contractor's full discharge of this responsibility the Owner shall be entitled to impose a reasonable set-off against payments due under Article 15.

2. If the uncovered Work is not found to be defective, Contractor shall be allowed an increase in the Contract Price or an extension of the Contract Times, or both, directly attributable to such uncovering, exposure, observation, inspection, testing, replacement, and reconstruction. If the parties are unable to agree as to the amount or extent thereof, then Contractor may submit a Change Proposal within 30 days of the determination that the Work is not defective.

14.06 *Owner May Stop the Work*

A. If the Work is defective, or Contractor fails to supply sufficient skilled workers or suitable materials or equipment, or fails to perform the Work in such a way that the completed Work will conform to the Contract Documents, then Owner may order Contractor to stop the Work, or any portion thereof, until the cause for such order has been eliminated; however, this right of Owner to stop the Work shall not give rise to any duty on the part of Owner to exercise this right for the benefit of Contractor, any Subcontractor, any Supplier, any other individual or entity, or any surety for, or employee or agent of any of them.

14.07 *Owner May Correct Defective Work*

A. If Contractor fails within a reasonable time after written notice from Engineer to correct defective Work, or to remove and replace rejected Work as required by Engineer, or if Contractor fails to perform the Work in accordance with the Contract Documents, or if Contractor fails to comply with any other provision of the Contract Documents, then Owner may, after seven days written notice to Contractor, correct or remedy any such deficiency.

B. In exercising the rights and remedies under this Paragraph 14.07, Owner shall proceed expeditiously. In connection with such corrective or remedial action, Owner may exclude Contractor from all or part of the Site, take possession of all or part of the Work and suspend Contractor's services related thereto, and incorporate in the Work all materials and equipment stored at the Site or for which Owner has paid Contractor but which are stored elsewhere. Contractor shall allow Owner, Owner's representatives, agents and employees, Owner's other contractors, and Engineer and Engineer's consultants access to the Site to enable Owner to exercise the rights and remedies under this paragraph.

EJCDC® C-700, Standard General Conditions of the Construction Contract.
Copyright © 2013 National Society of Professional Engineers, American Council of Engineering Companies, and American Society of Civil Engineers. All rights reserved.

C. All claims, costs, losses, and damages incurred or sustained by Owner in exercising the rights and remedies under this Paragraph 14.07 will be charged against Contractor as set-offs against payments due under Article 15. Such claims, costs, losses and damages will include but not be limited to all costs of repair, or replacement of work of others destroyed or damaged by correction, removal, or replacement of Contractor's defective Work.

D. Contractor shall not be allowed an extension of the Contract Times because of any delay in the performance of the Work attributable to the exercise by Owner of Owner's rights and remedies under this Paragraph 14.07.

ARTICLE 15 – PAYMENTS TO CONTRACTOR; SET-OFFS; COMPLETION; CORRECTION PERIOD

15.01 *Progress Payments*

A. *Basis for Progress Payments*: ~~The Schedule of Values established as provided in Article 2 will serve as the basis for progress payments and will be incorporated into a form of Application for Payment acceptable to Engineer.~~ Progress payments on account of Unit Price Work will be based on the number of units completed during the pay period, as determined under the provisions of Paragraph 13.03. Progress payments for cost-based Work will be based on Cost of the Work completed by Contractor during the pay period.

B. *Applications for Payments*:

1. At least 20 days before the date established in the Agreement for each progress payment (but not more often than once a month), Contractor shall submit to Engineer for review an Application for Payment filled out and signed by Contractor covering the Work completed as of the date of the Application and accompanied by such supporting documentation as is required by the Contract Documents. If payment is requested on the basis of materials and equipment not incorporated in the Work but delivered and suitably stored at the Site or at another location agreed to in writing, the Application for Payment shall also be accompanied by a bill of sale, invoice, or other documentation warranting that Owner has received the materials and equipment free and clear of all Liens, and evidence that the materials and equipment are covered by appropriate property insurance, a warehouse bond, or other arrangements to protect Owner's interest therein, all of which must be satisfactory to Owner.

2. Beginning with the second Application for Payment, each Application shall include an affidavit of Contractor stating that all previous progress payments received on account of the Work have been applied on account to discharge Contractor's legitimate obligations associated with prior Applications for Payment.

3. The amount of retainage with respect to progress payments will be as stipulated in the Agreement.

C. *Review of Applications*:

1. Engineer will, within 10 days after receipt of each Application for Payment, including each resubmittal, either indicate in writing a recommendation of payment and present the Application to Owner, or return the Application to Contractor indicating in writing Engineer's reasons for refusing to recommend payment. In the latter case, Contractor may make the necessary corrections and resubmit the Application.

2. Engineer's recommendation of any payment requested in an Application for Payment will constitute a representation by Engineer to Owner, based on Engineer's observations of the executed Work as an experienced and qualified design

Copyright © 2013 National Society of Professional Engineers, American Council of Engineering Companies, and American Society of Civil Engineers. All rights reserved.

professional, and on Engineer's review of the Application for Payment and the accompanying data and schedules, that to the best of Engineer's knowledge, information and belief:

a. the Work has progressed to the point indicated;

b. the quality of the Work is generally in accordance with the Contract Documents (subject to an evaluation of the Work as a functioning whole prior to or upon Substantial Completion, the results of any subsequent tests called for in the Contract Documents, a final determination of quantities and classifications for Unit Price Work under Paragraph 13.03, and any other qualifications stated in the recommendation); and

c. the conditions precedent to Contractor's being entitled to such payment appear to have been fulfilled in so far as it is Engineer's responsibility to observe the Work.

3. By recommending any such payment Engineer will not thereby be deemed to have represented that:

a. inspections made to check the quality or the quantity of the Work as it has been performed have been exhaustive, extended to every aspect of the Work in progress, or involved detailed inspections of the Work beyond the responsibilities specifically assigned to Engineer in the Contract; or

b. there may not be other matters or issues between the parties that might entitle Contractor to be paid additionally by Owner or entitle Owner to withhold payment to Contractor.

4. Neither Engineer's review of Contractor's Work for the purposes of recommending payments nor Engineer's recommendation of any payment, including final payment, will impose responsibility on Engineer:

a. to supervise, direct, or control the Work, or

b. for the means, methods, techniques, sequences, or procedures of construction, or the safety precautions and programs incident thereto, or

c. for Contractor's failure to comply with Laws and Regulations applicable to Contractor's performance of the Work, or

d. to make any examination to ascertain how or for what purposes Contractor has used the money paid on account of the Contract Price, or

e. to determine that title to any of the Work, materials, or equipment has passed to Owner free and clear of any Liens.

5. Engineer may refuse to recommend the whole or any part of any payment if, in Engineer's opinion, it would be incorrect to make the representations to Owner stated in Paragraph 15.01.C.2.

6. Engineer will recommend reductions in payment (set-offs) necessary in Engineer's opinion to protect Owner from loss because:

a. the Work is defective, requiring correction or replacement;

b. the Contract Price has been reduced by Change Orders;

Copyright © 2013 National Society of Professional Engineers, American Council of Engineering Companies, and American Society of Civil Engineers. All rights reserved.

c. Owner has been required to correct defective Work in accordance with Paragraph 14.07, or has accepted defective Work pursuant to Paragraph 14.04;

d. Owner has been required to remove or remediate a Hazardous Environmental Condition for which Contractor is responsible; or

e. Engineer has actual knowledge of the occurrence of any of the events that would constitute a default by Contractor and therefore justify termination for cause under the Contract Documents.

D. *Payment Becomes Due*:

1. Ten days after presentation of the Application for Payment to Owner with Engineer's recommendation, the amount recommended (subject to any Owner set-offs) will become due, and when due will be paid by Owner to Contractor.

E. *Reductions in Payment by Owner*:

1. In addition to any reductions in payment (set-offs) recommended by Engineer, Owner is entitled to impose a set-off against payment based on any of the following:

a. claims have been made against Owner on account of Contractor's conduct in the performance or furnishing of the Work, or Owner has incurred costs, losses, or damages on account of Contractor's conduct in the performance or furnishing of the Work, including but not limited to claims, costs, losses, or damages from workplace injuries, adjacent property damage, non-compliance with Laws and Regulations, and patent infringement;

b. Contractor has failed to take reasonable and customary measures to avoid damage, delay, disruption, and interference with other work at or adjacent to the Site;

c. Contractor has failed to provide and maintain required bonds or insurance;

d. Owner has been required to remove or remediate a Hazardous Environmental Condition for which Contractor is responsible;

e. Owner has incurred extra charges or engineering costs related to submittal reviews, evaluations of proposed substitutes, tests and inspections, or return visits to manufacturing or assembly facilities;

f. the Work is defective, requiring correction or replacement;

g. Owner has been required to correct defective Work in accordance with Paragraph 14.07, or has accepted defective Work pursuant to Paragraph 14.04;

h. the Contract Price has been reduced by Change Orders;

i. an event that would constitute a default by Contractor and therefore justify a termination for cause has occurred;

j. liquidated damages have accrued as a result of Contractor's failure to achieve Milestones, Substantial Completion, or final completion of the Work;

k. Liens have been filed in connection with the Work, except where Contractor has delivered a specific bond satisfactory to Owner to secure the satisfaction and discharge of such Liens;

l. there are other items entitling Owner to a set off against the amount recommended.

Copyright © 2013 National Society of Professional Engineers, American Council of Engineering Companies, and American Society of Civil Engineers. All rights reserved.

2. If Owner imposes any set-off against payment, whether based on its own knowledge or on the written recommendations of Engineer, Owner will give Contractor immediate written notice (with a copy to Engineer) stating the reasons for such action and the specific amount of the reduction, and promptly pay Contractor any amount remaining after deduction of the amount so withheld. Owner shall promptly pay Contractor the amount so withheld, or any adjustment thereto agreed to by Owner and Contractor, if Contractor remedies the reasons for such action. The reduction imposed shall be binding on Contractor unless it duly submits a Change Proposal contesting the reduction.

3. Upon a subsequent determination that Owner's refusal of payment was not justified, the amount wrongfully withheld shall be treated as an amount due as determined by Paragraph 15.01.C.1 and subject to interest as provided in the Agreement.

15.02 *Contractor's Warranty of Title*

A. Contractor warrants and guarantees that title to all Work, materials, and equipment furnished under the Contract will pass to Owner free and clear of (1) all Liens and other title defects, and (2) all patent, licensing, copyright, or royalty obligations, no later than seven days after the time of payment by Owner.

15.03 *Substantial Completion*

A. When Contractor considers the entire Work ready for its intended use Contractor shall notify Owner and Engineer in writing that the entire Work is substantially complete and request that Engineer issue a certificate of Substantial Completion. Contractor shall at the same time submit to Owner and Engineer an initial draft of punch list items to be completed or corrected before final payment.

B. Promptly after Contractor's notification, Owner, Contractor, and Engineer shall make an inspection of the Work to determine the status of completion. If Engineer does not consider the Work substantially complete, Engineer will notify Contractor in writing giving the reasons therefor.

C. If Engineer considers the Work substantially complete, Engineer will deliver to Owner a preliminary certificate of Substantial Completion which shall fix the date of Substantial Completion. Engineer shall attach to the certificate a punch list of items to be completed or corrected before final payment. Owner shall have seven days after receipt of the preliminary certificate during which to make written objection to Engineer as to any provisions of the certificate or attached punch list. If, after considering the objections to the provisions of the preliminary certificate, Engineer concludes that the Work is not substantially complete, Engineer will, within 14 days after submission of the preliminary certificate to Owner, notify Contractor in writing that the Work is not substantially complete, stating the reasons therefor. If Owner does not object to the provisions of the certificate, or if despite consideration of Owner's objections Engineer concludes that the Work is substantially complete, then Engineer will, within said 14 days, execute and deliver to Owner and Contractor a final certificate of Substantial Completion (with a revised punch list of items to be completed or corrected) reflecting such changes from the preliminary certificate as Engineer believes justified after consideration of any objections from Owner.

D. At the time of receipt of the preliminary certificate of Substantial Completion, Owner and Contractor will confer regarding Owner's use or occupancy of the Work following Substantial Completion, review the builder's risk insurance policy with respect to the end of the builder's risk coverage, and confirm the transition to coverage of the Work under a

Copyright © 2013 National Society of Professional Engineers, American Council of Engineering Companies, and American Society of Civil Engineers. All rights reserved.

permanent property insurance policy held by Owner. Unless Owner and Contractor agree otherwise in writing, Owner shall bear responsibility for security, operation, protection of the Work, property insurance, maintenance, heat, and utilities upon Owner's use or occupancy of the Work.

E. After Substantial Completion the Contractor shall promptly begin work on the punch list of items to be completed or corrected prior to final payment. In appropriate cases Contractor may submit monthly Applications for Payment for completed punch list items, following the progress payment procedures set forth above.

F. Owner shall have the right to exclude Contractor from the Site after the date of Substantial Completion subject to allowing Contractor reasonable access to remove its property and complete or correct items on the punch list.

15.04 *Partial Use or Occupancy*

A. Prior to Substantial Completion of all the Work, Owner may use or occupy any substantially completed part of the Work which has specifically been identified in the Contract Documents, or which Owner, Engineer, and Contractor agree constitutes a separately functioning and usable part of the Work that can be used by Owner for its intended purpose without significant interference with Contractor's performance of the remainder of the Work, subject to the following conditions:

1. At any time Owner may request in writing that Contractor permit Owner to use or occupy any such part of the Work that Owner believes to be substantially complete. If and when Contractor agrees that such part of the Work is substantially complete, Contractor, Owner, and Engineer will follow the procedures of Paragraph 15.03.A through E for that part of the Work.

2. At any time Contractor may notify Owner and Engineer in writing that Contractor considers any such part of the Work substantially complete and request Engineer to issue a certificate of Substantial Completion for that part of the Work.

3. Within a reasonable time after either such request, Owner, Contractor, and Engineer shall make an inspection of that part of the Work to determine its status of completion. If Engineer does not consider that part of the Work to be substantially complete, Engineer will notify Owner and Contractor in writing giving the reasons therefor. If Engineer considers that part of the Work to be substantially complete, the provisions of Paragraph 15.03 will apply with respect to certification of Substantial Completion of that part of the Work and the division of responsibility in respect thereof and access thereto.

4. No use or occupancy or separate operation of part of the Work may occur prior to compliance with the requirements of Paragraph 6.05 regarding builder's risk or other property insurance.

15.05 *Final Inspection*

A. Upon written notice from Contractor that the entire Work or an agreed portion thereof is complete, Engineer will promptly make a final inspection with Owner and Contractor and will notify Contractor in writing of all particulars in which this inspection reveals that the Work, or agreed portion thereof, is incomplete or defective. Contractor shall immediately take such measures as are necessary to complete such Work or remedy such deficiencies.

EJCDC® C-700, Standard General Conditions of the Construction Contract.
Copyright © 2013 National Society of Professional Engineers, American Council of Engineering Companies, and American Society of Civil Engineers. All rights reserved.

15.06 *Final Payment*

A. *Application for Payment*:

1. After Contractor has, in the opinion of Engineer, satisfactorily completed all corrections identified during the final inspection and has delivered, in accordance with the Contract Documents, all maintenance and operating instructions, schedules, guarantees, bonds, certificates or other evidence of insurance, certificates of inspection, annotated record documents (as provided in Paragraph 7.11), and other documents, Contractor may make application for final payment.

2. The final Application for Payment shall be accompanied (except as previously delivered) by:

   a. all documentation called for in the Contract Documents;

   b. consent of the surety, if any, to final payment;

   c. satisfactory evidence that all title issues have been resolved such that title to all Work, materials, and equipment has passed to Owner free and clear of any Liens or other title defects, or will so pass upon final payment.

   d. a list of all disputes that Contractor believes are unsettled; and

   e. complete and legally effective releases or waivers (satisfactory to Owner) of all Lien rights arising out of the Work, and of Liens filed in connection with the Work.

3. In lieu of the releases or waivers of Liens specified in Paragraph 15.06.A.2 and as approved by Owner, Contractor may furnish receipts or releases in full and an affidavit of Contractor that: (a) the releases and receipts include all labor, services, material, and equipment for which a Lien could be filed; and (b) all payrolls, material and equipment bills, and other indebtedness connected with the Work for which Owner might in any way be responsible, or which might in any way result in liens or other burdens on Owner's property, have been paid or otherwise satisfied. If any Subcontractor or Supplier fails to furnish such a release or receipt in full, Contractor may furnish a bond or other collateral satisfactory to Owner to indemnify Owner against any Lien, or Owner at its option may issue joint checks payable to Contractor and specified Subcontractors and Suppliers.

B. *Engineer's Review of Application and Acceptance*:

1. If, on the basis of Engineer's observation of the Work during construction and final inspection, and Engineer's review of the final Application for Payment and accompanying documentation as required by the Contract Documents, Engineer is satisfied that the Work has been completed and Contractor's other obligations under the Contract have been fulfilled, Engineer will, within ten days after receipt of the final Application for Payment, indicate in writing Engineer's recommendation of final payment and present the Application for Payment to Owner for payment. Such recommendation shall account for any set-offs against payment that are necessary in Engineer's opinion to protect Owner from loss for the reasons stated above with respect to progress payments. At the same time Engineer will also give written notice to Owner and Contractor that the Work is acceptable, subject to the provisions of Paragraph 15.07. Otherwise, Engineer will return the Application for Payment to Contractor, indicating in writing the reasons for refusing to recommend final payment, in which case Contractor shall make the necessary corrections and resubmit the Application for Payment.

Copyright © 2013 National Society of Professional Engineers, American Council of Engineering Companies, and American Society of Civil Engineers. All rights reserved.

C. *Completion of Work*: The Work is complete (subject to surviving obligations) when it is ready for final payment as established by the Engineer's written recommendation of final payment.

D. *Payment Becomes Due*: Thirty days after the presentation to Owner of the final Application for Payment and accompanying documentation, the amount recommended by Engineer (less any further sum Owner is entitled to set off against Engineer's recommendation, including but not limited to set-offs for liquidated damages and set-offs allowed under the provisions above with respect to progress payments) will become due and shall be paid by Owner to Contractor.

15.07 *Waiver of Claims*

A. The making of final payment will not constitute a waiver by Owner of claims or rights against Contractor. Owner expressly reserves claims and rights arising from unsettled Liens, from defective Work appearing after final inspection pursuant to Paragraph 15.05, from Contractor's failure to comply with the Contract Documents or the terms of any special guarantees specified therein, from outstanding Claims by Owner, or from Contractor's continuing obligations under the Contract Documents.

B. The acceptance of final payment by Contractor will constitute a waiver by Contractor of all claims and rights against Owner other than those pending matters that have been duly submitted or appealed under the provisions of Article 17.

15.08 *Correction Period*

A. If within one year after the date of Substantial Completion (or such longer period of time as may be prescribed by the terms of any applicable special guarantee required by the Contract Documents, or by any specific provision of the Contract Documents), any Work is found to be defective, or if the repair of any damages to the Site, adjacent areas that Contractor has arranged to use through construction easements or otherwise, and other adjacent areas used by Contractor as permitted by Laws and Regulations, is found to be defective, then Contractor shall promptly, without cost to Owner and in accordance with Owner's written instructions:

1. correct the defective repairs to the Site or such other adjacent areas;

2. correct such defective Work;

3. if the defective Work has been rejected by Owner, remove it from the Project and replace it with Work that is not defective, and

4. satisfactorily correct or repair or remove and replace any damage to other Work, to the work of others, or to other land or areas resulting therefrom.

B. If Contractor does not promptly comply with the terms of Owner's written instructions, or in an emergency where delay would cause serious risk of loss or damage, Owner may have the defective Work corrected or repaired or may have the rejected Work removed and replaced. Contractor shall pay all claims, costs, losses, and damages (including but not limited to all fees and charges of engineers, architects, attorneys, and other professionals and all court or arbitration or other dispute resolution costs) arising out of or relating to such correction or repair or such removal and replacement (including but not limited to all costs of repair or replacement of work of others).

C. In special circumstances where a particular item of equipment is placed in continuous service before Substantial Completion of all the Work, the correction period for that item may start to run from an earlier date if so provided in the Specifications.

Copyright © 2013 National Society of Professional Engineers, American Council of Engineering Companies, and American Society of Civil Engineers. All rights reserved.

D. Where defective Work (and damage to other Work resulting therefrom) has been corrected or removed and replaced under this paragraph, the correction period hereunder with respect to such Work will be extended for an additional period of one year after such correction or removal and replacement has been satisfactorily completed.

E. Contractor's obligations under this paragraph are in addition to all other obligations and warranties. The provisions of this paragraph shall not be construed as a substitute for, or a waiver of, the provisions of any applicable statute of limitation or repose.

ARTICLE 16 – SUSPENSION OF WORK AND TERMINATION

16.01 *Owner May Suspend Work*

A. At any time and without cause, Owner may suspend the Work or any portion thereof for a period of not more than 90 consecutive days by written notice to Contractor and Engineer. Such notice will fix the date on which Work will be resumed. Contractor shall resume the Work on the date so fixed. Contractor shall be entitled to an adjustment in the Contract Price or an extension of the Contract Times, or both, directly attributable to any such suspension. Any Change Proposal seeking such adjustments shall be submitted no later than 30 days after the date fixed for resumption of Work.

16.02 *Owner May Terminate for Cause*

A. The occurrence of any one or more of the following events will constitute a default by Contractor and justify termination for cause:

1. Contractor's persistent failure to perform the Work in accordance with the Contract Documents (including, but not limited to, failure to supply sufficient skilled workers or suitable materials or equipment or failure to adhere to the Progress Schedule);

2. Failure of Contractor to perform or otherwise to comply with a material term of the Contract Documents;

3. Contractor's disregard of Laws or Regulations of any public body having jurisdiction; or

4. Contractor's repeated disregard of the authority of Owner or Engineer.

B. If one or more of the events identified in Paragraph 16.02.A occurs, then after giving Contractor (and any surety) ten days written notice that Owner is considering a declaration that Contractor is in default and termination of the contract, Owner may proceed to:

1. declare Contractor to be in default, and give Contractor (and any surety) notice that the Contract is terminated; and

2. enforce the rights available to Owner under any applicable performance bond.

C. Subject to the terms and operation of any applicable performance bond, if Owner has terminated the Contract for cause, Owner may exclude Contractor from the Site, take possession of the Work, incorporate in the Work all materials and equipment stored at the Site or for which Owner has paid Contractor but which are stored elsewhere, and complete the Work as Owner may deem expedient.

D. Owner may not proceed with termination of the Contract under Paragraph 16.02.B if Contractor within seven days of receipt of notice of intent to terminate begins to correct its failure to perform and proceeds diligently to cure such failure.

E. If Owner proceeds as provided in Paragraph 16.02.B, Contractor shall not be entitled to receive any further payment until the Work is completed. If the unpaid balance of the

Copyright © 2013 National Society of Professional Engineers, American Council of Engineering Companies, and American Society of Civil Engineers. All rights reserved.

Contract Price exceeds the cost to complete the Work, including all related claims, costs, losses, and damages (including but not limited to all fees and charges of engineers, architects, attorneys, and other professionals) sustained by Owner, such excess will be paid to Contractor. If the cost to complete the Work including such related claims, costs, losses, and damages exceeds such unpaid balance, Contractor shall pay the difference to Owner. Such claims, costs, losses, and damages incurred by Owner will be reviewed by Engineer as to their reasonableness and, when so approved by Engineer, incorporated in a Change Order. When exercising any rights or remedies under this paragraph, Owner shall not be required to obtain the lowest price for the Work performed.

F. Where Contractor's services have been so terminated by Owner, the termination will not affect any rights or remedies of Owner against Contractor then existing or which may thereafter accrue, or any rights or remedies of Owner against Contractor or any surety under any payment bond or performance bond. Any retention or payment of money due Contractor by Owner will not release Contractor from liability.

G. If and to the extent that Contractor has provided a performance bond under the provisions of Paragraph 6.01.A, the provisions of that bond shall govern over any inconsistent provisions of Paragraphs 16.02.B and 16.02.D.

16.03 *Owner May Terminate For Convenience*

A. Upon seven days written notice to Contractor and Engineer, Owner may, without cause and without prejudice to any other right or remedy of Owner, terminate the Contract. In such case, Contractor shall be paid for (without duplication of any items):

1. completed and acceptable Work executed in accordance with the Contract Documents prior to the effective date of termination, including fair and reasonable sums for overhead and profit on such Work;

2. expenses sustained prior to the effective date of termination in performing services and furnishing labor, materials, or equipment as required by the Contract Documents in connection with uncompleted Work, plus fair and reasonable sums for overhead and profit on such expenses; and

3. other reasonable expenses directly attributable to termination, including costs incurred to prepare a termination for convenience cost proposal.

B. Contractor shall not be paid on account of loss of anticipated overhead, profits, or revenue, or other economic loss arising out of or resulting from such termination.

16.04 *Contractor May Stop Work or Terminate*

A. If, through no act or fault of Contractor, (1) the Work is suspended for more than 90 consecutive days by Owner or under an order of court or other public authority, or (2) Engineer fails to act on any Application for Payment within 30 days after it is submitted, or (3) Owner fails for 30 days to pay Contractor any sum finally determined to be due, then Contractor may, upon seven days written notice to Owner and Engineer, and provided Owner or Engineer do not remedy such suspension or failure within that time, terminate the contract and recover from Owner payment on the same terms as provided in Paragraph 16.03.

B. In lieu of terminating the Contract and without prejudice to any other right or remedy, if Engineer has failed to act on an Application for Payment within 30 days after it is submitted, or Owner has failed for 30 days to pay Contractor any sum finally determined to be due, Contractor may, seven days after written notice to Owner and Engineer, stop the

Copyright © 2013 National Society of Professional Engineers, American Council of Engineering Companies, and American Society of Civil Engineers. All rights reserved.

Work until payment is made of all such amounts due Contractor, including interest thereon. The provisions of this paragraph are not intended to preclude Contractor from submitting a Change Proposal for an adjustment in Contract Price or Contract Times or otherwise for expenses or damage directly attributable to Contractor's stopping the Work as permitted by this paragraph.

ARTICLE 17 – FINAL RESOLUTION OF DISPUTES

17.01 *Methods and Procedures*

A. *Disputes Subject to Final Resolution*: The following disputed matters are subject to final resolution under the provisions of this Article:

1. A timely appeal of an approval in part and denial in part of a Claim, or of a denial in full; and

2. Disputes between Owner and Contractor concerning the Work or obligations under the Contract Documents, and arising after final payment has been made.

B. *Final Resolution of Disputes*: For any dispute subject to resolution under this Article, Owner or Contractor may:

1. elect in writing to invoke the dispute resolution process provided for in the Supplementary Conditions; or

2. agree with the other party to submit the dispute to another dispute resolution process; or

3. if no dispute resolution process is provided for in the Supplementary Conditions or mutually agreed to, give written notice to the other party of the intent to submit the dispute to a court of competent jurisdiction.

17.02 *Arbitration*

A. All matters subject to final resolution under this Article will be decided by arbitration in accordance with the rules of an arbitration agency with selection recommendation made by Engineer and approve of Owner and Contractor, subject to the conditions and limitations of this paragraph. This agreement to arbitrate and any other agreement or consent to arbitrate entered into will be specifically enforceable under the prevailing law of any court having jurisdiction.

B. The demand for arbitration will be filed in writing with the other party to the Contract and with the selected arbitrator or arbitration provider, and a copy will be sent to Engineer for information. The demand for arbitration will be made within the specific time required in this Article, or if no specified time is applicable within a reasonable time after the matter in question has arisen, and in no event shall any such demand be made after the date when institution of legal or equitable proceedings based on such matter in question would be barred by the applicable statute of limitations. The demand for arbitration should include specific reference to Paragraph SC-17.02.D below.

C. No arbitration arising out of or relating to the Contract shall include by consolidation, joinder, or in any other manner any other individual or entity (including Engineer, and Engineer's consultants and the officers, directors, partners, agents, employees or consultants of any of them) who is not a party to this Contract unless:

1. The inclusion of such other individual or entity is necessary if complete relief is to be afforded among those who are already parties to the arbitration; and

Copyright © 2013 National Society of Professional Engineers, American Council of Engineering Companies, and American Society of Civil Engineers. All rights reserved.

2. Such other individual or entity is substantially involved in a question of law or fact which is common to those who are already parties to the arbitration and which will arise in such proceedings.

D. The award rendered by the arbitrator(s) shall be consistent with the agreement of the parties, in writing, and include a concise breakdown of the award, and a written explanation of the award specifically citing the Contract provisions deemed applicable and relied on in making the award.

E. The award will be final. Judgment may be entered upon it in any court having jurisdiction thereof, and it will not be subject to modification or appeal, subject to provisions of the Laws and Regulations relating to vacating or modifying an arbitral award.

F. The fees and expenses of the arbitrators and any arbitration service shall be shared equally by Owner and Contractor.

17.03 *Attorneys' Fees*

A. Attorneys' Fees: For any matter subject to final resolution under this Article, the prevailing party shall be entitled to an award of its attorneys' fees incurred in the final resolution proceedings, in an equitable amount to be determined in the discretion of the court, arbitrator, arbitration panel, or other arbiter of the matter subject to final resolution, taking into account the parties' initial demand or defense positions in comparison with the final result.

ARTICLE 18 – MISCELLANEOUS

18.01 *Giving Notice*

A. Whenever any provision of the Contract Documents requires the giving of written notice, it will be deemed to have been validly given if:

1. delivered in person, by a commercial courier service or otherwise, to the individual or to a member of the firm or to an officer of the corporation for which it is intended; or

2. delivered at or sent by registered or certified mail, postage prepaid, to the last business address known to the sender of the notice.

18.02 *Computation of Times*

A. When any period of time is referred to in the Contract by days, it will be computed to exclude the first and include the last day of such period. If the last day of any such period falls on a Saturday or Sunday or on a day made a legal holiday by the law of the applicable jurisdiction, such day will be omitted from the computation.

18.03 *Cumulative Remedies*

A. The duties and obligations imposed by these General Conditions and the rights and remedies available hereunder to the parties hereto are in addition to, and are not to be construed in any way as a limitation of, any rights and remedies available to any or all of them which are otherwise imposed or available by Laws or Regulations, by special warranty or guarantee, or by other provisions of the Contract. The provisions of this paragraph will be as effective as if repeated specifically in the Contract Documents in connection with each particular duty, obligation, right, and remedy to which they apply.

Copyright © 2013 National Society of Professional Engineers, American Council of Engineering Companies, and American Society of Civil Engineers. All rights reserved.

18.04 *Limitation of Damages*

A. With respect to any and all Change Proposals, Claims, disputes subject to final resolution, and other matters at issue, neither Owner nor Engineer, nor any of their officers, directors, members, partners, employees, agents, consultants, or subcontractors, shall be liable to Contractor for any claims, costs, losses, or damages sustained by Contractor on or in connection with any other project or anticipated project.

18.05 *No Waiver*

A. A party's non-enforcement of any provision shall not constitute a waiver of that provision, nor shall it affect the enforceability of that provision or of the remainder of this Contract.

18.06 *Survival of Obligations*

A. All representations, indemnifications, warranties, and guarantees made in, required by, or given in accordance with the Contract, as well as all continuing obligations indicated in the Contract, will survive final payment, completion, and acceptance of the Work or termination or completion of the Contract or termination of the services of Contractor.

18.07 *Controlling Law*

A. This Contract is to be governed by the law of the state in which the Project is located.

18.08 *Headings*

A. Article and paragraph headings are inserted for convenience only and do not constitute parts of these General Conditions.

Copyright © 2013 National Society of Professional Engineers, American Council of Engineering Companies, and American Society of Civil Engineers. All rights reserved.

EJCDC
ENGINEERS JOINT CONTRACT DOCUMENTS COMMITTEE

Contractor's Application for Payment No.

	Application Period:	Application Date:
To (Owner):	From (Contractor):	Via (Engineer):
Project:	Contract:	
Owner's Contract No.:	Contractor's Project No.:	Engineer's Project No.:

Application For Payment

Change Order Summary

Approved Change Orders		
Number	Additions	Deductions
TOTALS		
NET CHANGE BY CHANGE ORDERS		

1. ORIGINAL CONTRACT PRICE			**$**	
2. Net change by Change Orders			**$**	
3. Current Contract Price (Line 1 ± 2)			**$**	
4. TOTAL COMPLETED AND STORED TO DATE (Column F total on Progress Estimates)			**$**	**#REF!**
5. RETAINAGE:				
a.	**X** #REF!	**Work Completed**	**$**	**#REF!**
b.	**X** #REF!	**Stored Material**	**$**	**#REF!**
c. Total Retainage (Line 5.a + Line 5.b)			**$**	**#REF!**
6. AMOUNT ELIGIBLE TO DATE (Line 4 - Line 5.c)			**$**	**#REF!**
7. LESS PREVIOUS PAYMENTS (Line 6 from prior Application)			**$**	
8. AMOUNT DUE THIS APPLICATION			**$**	**#REF!**
9. BALANCE TO FINISH, PLUS RETAINAGE (Column G total on Progress Estimates + Line 5.c above)			**$**	**#REF!**

Contractor's Certification

The undersigned Contractor certifies, to the best of its knowledge, the following:
(1) All previous progress payments received from Owner on account of Work done under the Contract have been applied on account to discharge Contractor's legitimate obligations incurred in connection with the Work covered by prior Applications for Payment;
(2) Title to all Work, materials and equipment incorporated in said Work, or otherwise listed in or covered by this Application for Payment, will pass to Owner at time of payment free and clear of all Liens, security interests, and encumbrances (except such as are covered by a bond acceptable to Owner indemnifying Owner against any such Liens, security interest, or encumbrances); and
(3) All the Work covered by this Application for Payment is in accordance with the Contract Documents and is not defective.

Contractor Signature

By:	Date:

Payment of: $ _____
(Line 8 or other - attach explanation of the other amount)

is recommended by: _____ _____
(Engineer) (Date)

Payment of: $ _____
(Line 8 or other - attach explanation of the other amount)

is approved by: _____ _____
(Owner) (Date)

Approved by: _____ _____
Funding or Financing Entity (if applicable) (Date)

© 2013 National Society of Professional Engineers for EJCDC. All rights reserved.

Progress Estimate - Unit Price Work

Contractor's Application

For (Contract):	Application Number:
Application Period:	Application Date:

A					B	C	D	E	F		
Item		Contract Information									
Bid Item No.	Description	Item Quantity	Units	Unit Price	Total Value of Item ($)	Estimated Quantity Installed	Value of Work Installed to Date	Materials Presently Stored (not in C)	Total Completed and Stored to Date (D + E)	% (F / B)	Balance to Finish (B - F)
	Totals										

© 2013 National Society of Professional Engineers for EJCDC. All rights reserved.

EJCDC
ENGINEERS JOINT CONTRACT DOCUMENTS COMMITTEE

Change Order No. _____

Date of Issuance:	Effective Date:
Owner: City of Hancock	Owner's Contract No.: PW #157
Contractor:	Contractor's Project No.:
Engineer: OHM Advisors	Engineer's Project No.: 7030-18-0030
Project: Storm Sewer Repairs Phase 2	Contract Name: Storm Sewer Repairs Phase 2

The Contract is modified as follows upon execution of this Change Order:

Description:

Attachments: *[List documents supporting change]*

CHANGE IN CONTRACT PRICE	**CHANGE IN CONTRACT TIMES** *[note changes in Milestones if applicable]*
Original Contract Price: $_____	Original Contract Times: Substantial Completion: _____ Ready for Final Payment: _____ days or dates
[Increase] [Decrease] from previously approved Change Orders No. ___ to No. ___: $_____	[Increase] [Decrease] from previously approved Change Orders No. ___ to No. ___: Substantial Completion: _____ Ready for Final Payment: _____ days
Contract Price prior to this Change Order: $_____	Contract Times prior to this Change Order: Substantial Completion: _____ Ready for Final Payment: _____ days or dates
[Increase] [Decrease] of this Change Order: $_____	[Increase] [Decrease] of this Change Order: Substantial Completion: _____ Ready for Final Payment: _____ days or dates
Contract Price incorporating this Change Order: $_____	Contract Times with all approved Change Orders: Substantial Completion: _____ Ready for Final Payment: _____ days or dates

RECOMMENDED:	ACCEPTED:	ACCEPTED:
By: _____	B _____	By: _____
Engineer (if required)	Owner (Authorized Signature)	Contractor (Authorized Signature)
Title: _____	T _____	Title _____
Date: _____	D _____	Date _____

Approved by Funding Agency
(if applicable)

By: _____ Date:

Title: _____

CLOSEOUT DOCUMENTS

Final Completion Checklist

City of Hancock – Storm Sewer Repairs Phase 2
Project No. 7030-18-0030
Hancock, MI

Date:

The following is a list of contractual items that the owner and engineer have found to be incomplete or in need of correction. The failure to include any items on the list does not alter the responsibility of the Contractor to complete all Work in accordance with the contract documents.

General Items:

1. Provide maintenance manuals and instructions.
2. Provide As-Built drawings.
3. Provide Consent of Surety for final payment.
4. Provide Guaranty (attached).
5. Provide sworn statement.
6. Provide final wavier of liens.

Specific Items:

Space	Items to Complete	Date of Completion
	1.	
	2.	
	3.	
	4.	
	5.	

END OF FINAL COMPLETION CHECK LIST

EJCDC
ENGINEERS JOINT CONTRACT DOCUMENTS COMMITTEE

CERTIFICATE OF SUBSTANTIAL COMPLETION

Owner:	City of Hancock	Owner's Contract No.:	PW 157
Contractor:		Contractor's Project No.:	
Engineer:	OHM Advisors	Engineer's Project No.:	7030-18-0030
Project:	Storm Sewer Repairs Phase 2	Contract Name:	Storm Sewer Repairs Phase 2

This [preliminary] [final] Certificate of Substantial Completion applies to:

☐ All Work ☐ The following specified portions of the Work:

Date of Substantial Completion

The Work to which this Certificate applies has been inspected by authorized representatives of Owner, Contractor, and Engineer, and found to be substantially complete. The Date of Substantial Completion of the Work or portion thereof designated above is hereby established, subject to the provisions of the Contract pertaining to Substantial Completion. The date of Substantial Completion in the final Certificate of Substantial Completion marks the commencement of the contractual correction period and applicable warranties required by the Contract.

A punch list of items to be completed or corrected is attached to this Certificate. This list may not be all-inclusive, and the failure to include any items on such list does not alter the responsibility of the Contractor to complete all Work in accordance with the Contract.

The responsibilities between Owner and Contractor for security, operation, safety, maintenance, heat, utilities, insurance, and warranties upon Owner's use or occupancy of the Work shall be as provided in the Contract, except as amended as follows: *[Note: Amendments of contractual responsibilities recorded in this Certificate should be the product of mutual agreement of Owner and Contractor; see Paragraph 15.03.D of the General Conditions.]*

Amendments to Owner's responsibilities: ☐ None ☐ As follows

Amendments to Contractor's responsibilities: ☐ None ☐ As follows:

The following documents are attached to and made a part of this Certificate: *[punch list; others]*

This Certificate does not constitute an acceptance of Work not in accordance with the Contract Documents, nor is it a release of Contractor's obligation to complete the Work in accordance with the Contract.

EXECUTED BY ENGINEER:	RECEIVED:	RECEIVED:
By: _____ (Authorized signature)	By: _____ Owner (Authorized Signature)	By: _____ Contractor (Authorized Signature)
Title: _____	Title: _____	Title: _____
Date: _____	Date: _____	Date: _____

GUARANTY

The CONTRACTOR, as a condition precedent to final payment, shall execute this Guaranty to the OWNER, guaranteeing for one (1) year from the date of substantial completion, to keep in good order and repair any defect in all the work completed under the Agreement. This includes work which may develop during said period due to improper materials, defective equipment, improper materials workmanship, or arrangements and in any work which may be affected in correcting any repairs or defects. This Guaranty will be binding upon the CONTRACTOR, his subcontractors and/or material suppliers and will be without any expense to the OWNER.

OWNER:	CONTRACTOR:
_____	_____
Print	Print
_____	_____
Signature	Signature
_____	_____
Date	Date

OHM ADVISORS:

_____

Print

_____

Signature

_____

Date

OHM Advisors
424 HANCOCK STREET
HANCOCK, MICHIGAN 49930
T 906.482.0535
F 906.482.6453
OHM-Advisors.com

STATE OF MICHIGAN **SWORN STATEMENT**

County of_____} ss.
_____, being duly sworn, deposes and says:

That _____ is the (contractor) (subcontractor) for an improvement to the following described real property situated in _____County, Michigan, described as follows:

_____

_____

_____

(Insert legal description of property)

That the following is a statement of each subcontractor and supplier and laborer with whom the (contractor) (subcontractor) has (contracted) (subcontracted) for performance under the contract with the owner or lessee thereof, and that the amounts due to the persons as of the date hereof are correctly and fully set forth opposite their names, as follows:

Name of subcontractor, supplier, or laborer	Type of improvement furnished	Total contract price	Amount already paid	Amount currently owing	Accrued fringe benefits contributions (if applicable)	Balance to complete
Totals						

That the contractor has not procured material from, or subcontracted with, any person other than those set forth on the reverse side and owes no money for the improvement other than the sums set forth on the reverse side.

Deponent further says that he or she makes the foregoing statement as the (contractor) (subcontractor) or as _____ of the (contractor) (subcontractor) for the purpose of representing to the owner or lessee of the premises described on the reverse side and his or her agents that the property described on the reverse side is free from claims of construction liens, or the possibility of construction liens, except as specifically set forth on the reverse side.

WARNING: AN OWNER OR LESSEE OF THE PROPERTY DESCRIBED ON THE REVERSE SIDE MAY NOT RELY ON THIS SWORN STATEMENT TO AVOID THE CLAIM OF A SUBCONTRACTOR, SUPPLIER, OR LABORER WHO HAS PROVIDED A NOTICE OF FURNISHING TO THE DESIGNEE OR TO THE OWNER OR LESSEE IF THE DESIGNEE IS NOT NAMED OR HAS DIED.

_____
Deponent

Subscribed and sworn to before me this _____ day of _____, 20 _____

_____
Notary Public

_____County, Michigan

My Commission Expires: _____

Print Clear

This document can be completed on line. When you are finished, press the Print button to print your completed form. If you need to clear the form for any reason click the Clear button

FULL UNCONDITIONAL WAIVER

My/our contract with _____ to provide
(other contracting party)
_____for the improvement of the property described as

_____

_____ having been

fully paid and satisfied, by signing this waiver, all my/our construction lien rights against such property are hereby waived and released.

If the improvement is provided to property that is a residential structure and if the owner or lessee of the property or the owner's or lessee's designee has received a notice of furnishing from me/one or us or if I/we are not required to provide one, and the owner, lessee, or designee has not received this waiver directly from me/one of us, the owner, lessee, or designee may not rely upon it without contacting me/one of us, either in writing, by telephone, or personally, to verify that it is authentic.

_____
(Printed Name of Lien Claimant)

_____
(Signature of lien claimant)

Signed on: _____ Address:_____

_____

Telephone: _____

DO NOT SIGN BLANK OR INCOMPLETE FORMS. RETAIN A COPY.

NOTICE TO BIDDERS

CITY OF HANCOCK

SPECIAL PROVISION
FOR
MAINTAINING TRAFFIC

DESCRIPTION

Local traffic shall be maintained by the Contractor throughout the project in accordance with Section 104.07, 104.11, 812 and 922 of the MDOT 2012 Standard Specifications and in accordance with any Supplemental Specifications, the MDOT Maintaining Traffic Typicals and as specified herein. All traffic control devices shall conform to the 2011 Michigan Manual of Uniform Traffic Control Devices (MMUTCD), as amended.

GENERAL

The Contractor shall notify all emergency response, road commission, municipalities, school bus garages, the Engineer, MDOT, and other necessary agencies of any road closures within the project area.

The Contractor shall coordinate his operations with other Contractors or Utility owners performing work on other projects within or adjacent to the Construction Influence Area (CIA) or adjoining areas to avoid conflicts in maintenance of traffic, construction signing and to provide for the orderly progress of work.

The Contractor shall provide access at all times during construction for resident, school buses, garbage trucks, and any other service vehicles required to traverse and service residences within the construction area.

CONSTRUCTION INFLUENCE AREA (CIA)

The Construction Influence Area (CIA) shall include the area within the road right-of-way, including intersecting roadways, to the limits of advanced construction signing, or any other signs that pertain to this location. In addition, the CIA includes the right-of-way of any designated detour route, intersecting road or ramp adjacent to the work zone as far as the construction detour signing extends.

The Contractor shall notify the Engineer and property owners a minimum of 48 hours in advance of driveway work / closure.

Barricades used to control traffic at night shall be lighted. Temporary signs shall be Type B prismatic mounted with a 7-foot bottom height, unless otherwise directed by the Engineer.

Maintaining traffic includes all additional work and materials necessary for traffic maintenance, Utility maintenance and coordination, and maintenance during constructing all items of work.

COORDINATION OF WORK:

The Contractor shall coordinate this work with other Contractors performing work within or adjacent to the Construction Influence Area (CIA), to avoid conflicts in the maintenance of traffic, construction signing, and to provide for the orderly progress of contract work. These projects include, but are not limited to the following:

- Maintenance Agencies may perform maintenance work within or adjacent to the Construction Influence Area (CIA). The City and/or Contract Maintenance Agency will coordinate their operations with the Engineer to minimize the interference to the Contractor. No additional payment will be made to the Contractor for the joint use of the traffic control items.

TRAFFIC RESTRICTIONS:

Changes or adjustments in the signing provided may be necessary as determined by the Engineer. Any changes made during construction that do not require the use of additional materials will be included in the maintaining traffic pay items and will not be paid for separately.

Contractors' operations will be limited by local municipality time and noise ordinances, unless approved by the local municipality and the Engineer in writing. Current requirements are that the Contractor may not work after 8 pm. All weekend work shall be coordinated with the Engineer.

No work or additional lane closures, unless approved by the Engineer, shall be performed during Memorial Day, July 4th or Labor Day periods, as defined by the Engineer.

Thru traffic shall follow construction signage according to the following MDOT Maintaining Traffic Typicals and Work Zone Special Details: M0020a, M0730a, and WZD 125-E.

All local noise and dust control ordinances shall apply to this project.

CONSTRUCTION:

All work will be conducted under closed to thru traffic. Access to all driveways shall be maintained throughout the construction process.

MEASUREMENT AND PAYMENT:

CITY OF HANCOCK

SPECIAL PROVISION
FOR
MAINTAINING TRAFFIC

Payment for Maintaining Traffic shall be in accordance with Section 812 of the Michigan Department of Transportation 2012 Standards for Construction for the work items listed on the plans and in the proposal, which shall be payment in full for all labor, material, and equipment needed to accomplish this work.

Payment for Temporary Signs, Pavement Marking, Plastic Drums, and Barricades shall be made based on the maximum quantity in place at any one time as determined by the Engineer for the entire project. Moving of units from one location to another is considered included in the appropriate pay item.

NOTICE TO BIDDERS

CITY OF HANCOCK

UTILITY COORDINATION

The contractor shall cooperate and coordinate activities with the owners of utilities as stated in Section 104 of the 2012 MDOT Standard Specifications for Construction. In addition, for the protection of underground utilities, the contractor shall follow the requirements in Section 107.12 of the 2012 MDOT Standard Specifications for Construction. Contractor delay claims, resulting from a utility, will be determined based upon Section 108.09 of the 2012 MDOT Standard Specifications for Construction.

Public Utilities
The following Utilities have facilities located within the Project CIA:

UTILITY	OWNER	CONTACT
Cable TV	Charter Communications 359 US 41 East Negaunee MI, 49866	Herb Walline (906) 401-0632 Herb.walline@charter.com
Water	City of Hancock 399 Quincy Street Hancock, MI 49930	Deve Philija (906) 482-0619 (906) 482-1480
Sanitary/Storm Sewer	City of Hancock 399 Quincy Street Hancock, MI 49930	Leroy Kenny (906) 482-1480 (906)-370-1793
Sanitary/Storm Sewer/Water	City of Hancock 399 Quincy Street Hancock, MI 49930	Bill Marlor – DPW Director (906) 482-1480 (906)-370-8968 dpwdirector@cityofhancock.net
Gas	Semco Energy 34 US 41 East Negaunee, MI 49866	Mike Kosht (906) 250-7196 Michael.kosht@semcoenergy.com
Electric	UPPCO 600 Lakeshore Drive Houghton, MI 49931	Mike Jurmu (906) 483-4572 majurmu@uppco.com
Telephone	AT&T 211 East B St Iron Mountain, MI 49801	Marsha Bertoldi (906) 779-2744 Mb8983@att.com
Communication Cable	PFN 204 State Street PO Box 9 Baraga, MI 49908	Jon French (906) 353-6644 jfrench@up.net
Communication Cable	Merit Network Inc 1000 Oakbrook Dr, Suite 200 Ann Arbor, MI 48104	Nick Andrus (734)-277-7502 nandrus@merit.edu

For protection of underground utilities and in conformance with Public Act 174, the Contractor shall call Miss Dig at 1-800-482-7171 or 811, a minimum of three full working

days, excluding Saturdays, Sundays, and holidays, prior to beginning each excavation in areas where public utilities have not been previously located. Members will thus be routinely notified. This does not relieve the contractor of the responsibility of notifying utility owners who may not be a part of the "Miss Dig" alert system.

The owners of existing service facilities that are within grading or structure limits will move them to locations designated by the Project Engineer or will remove them entirely from the Right-of-Way. Owners of Public Utilities will not be required by the City of Hancock to move additional poles or structures in order to facilitate the operation of construction equipment unless it is determined by the Project Engineer that such poles or structures constitute a hazard to the public or are extraordinarily dangerous to the Contractor's operations.

Temporary Supporting of Active Utility Lines within Excavations - Where existing utility lines are within areas of proposed construction excavations; the Contractor shall coordinate with the respective utilities to support and protect the utilities within the excavation according to Miss Dig regulations and per the appropriate utility company standards. Protection and supporting of utilities shall be considered as included in other related contract items and not paid for separately.

The Contractor is responsible for coordinating all work activities with utility companies. The Contractor should expect frequent coordination and communication with all utility companies throughout the project.

Note: All work shall be done in accordance with the technical sections of the 2012 MDOT Standards Specifications for construction, MDOT Standards Plans and Details, and Special Provisions included herein.

SPECIAL PROVISIONS

MICHIGAN
DEPARTMENT OF TRANSPORTATION

SPECIAL PROVISION
FOR
HIGH VISIBILITY CLOTHING

SSA:JDG 1 of 1 APPR:MWB:CRB:05-25-18
FHWA:APPR:06-01-18

Add the following, to the end, of subsection 104.07.B, Safety and Health Requirements, on page 36 of the Standard Specification for Construction:

4. **Worker Visibility.** All workers must wear high-visibility safety apparel as specified in the MMUTCD.

   Costs incurred to comply with this requirement will be the responsibility of the Contractor.

Revise the second paragraph of subsection 812.03.G.8, on page 619 of the Standard Specification for Construction to read:

Equip traffic regulators with the following:

a. High-visibility safety apparel as specified in the MMUTCD;
b. “Stop/Slow” or “Stop/Stop” sign paddles; and
c. A two-way radio system and a standby back-up system, if traffic regulators are not visible to each other.

Delete the subsection 922.11.B, on page 944 of the Standard Specification for Construction in its entirety and replace with the following:

B. **Traffic Regulator's High-Visibility Safety Apparel.** Traffic regulators must wear high-visibility safety apparel as specified in the MMUTCD.

MICHIGAN
DEPARTMENT OF TRANSPORTATION

SPECIAL PROVISION
FOR
TEMPORARY TRAFFIC CONTROL MATERIALS

OFS:RAL 1 of 1 APPR:CRB:JFS:11-21-16
FHWA:APPR:11-22-16

Add the following subsection to subsection 105.01.B, on page 48 of the Standard Specifications for Construction:

1. Temporary traffic control materials that are covered in the Materials Quality Assurance Procedures Manual, section 4.10 *Temporary Traffic Control Certification and Acceptance Procedure,* are not required to be listed in the *Materials Source List*.

MICHIGAN
DEPARTMENT OF TRANSPORTATION

SPECIAL PROVISION
FOR
EROSION CONTROL, INLET PROTECTION, FABRIC DROP

CFS:DMG 1 of 2 APPR:TWK:CP:03-22-18
FHWA:APPR:03-29-18

a. Description. This work consists of furnishing and installing acceptable alternatives to inlet protection devices (devices) listed in the *Soil Erosion and Sedimentation Control Manual* when the pay item Erosion Control, Inlet Protection, Fabric Drop is included in the contract.

This work consists of providing all labor, equipment and materials necessary to furnish, install, maintain, dispose of collected material and remove devices at the locations shown on the plans or as directed by the Engineer.

b. Materials. The following devices are approved for use as acceptable alternatives:

1. Siltsack Type B, Regular Flow, by ACF Environmental, Inc.

2. Inlet Pro Sediment Bag, Standard Flow, with optional foam deflector by Hanes Geo Components.

3. Dandy Curb Bag, Dandy Bag, Dandy Curb Sack, Dandy Sack, or Dandy Pop by Dandy Products, Inc.

4. Basin Bag, Regular Flow by CSI Geoturf.

5. Flexstorm Catch-It and Flexstorm Pure used with filter bag types FX, FX+, FXO, PC, PC+ or IL.

Ensure provided devices are sized appropriately for the drainage structures in which they will be installed.

c. Construction. Install, maintain and remove the devices according to the manufacturer's guidelines. Remove material collected by the devices according to the manufacturer's guidelines or as directed by the Engineer.

Dispose of collected material in accordance with subsection 205.03.P of the Standard Specifications for Construction. Those devices that are no longer needed and have been removed may be reused elsewhere on the project as approved by the Engineer.

d. Measurement and Payment. The completed work, as described, will be measured and paid for at the contract unit price using the following pay item:

Pay Item	**Pay Unit**
Erosion Control, Inlet Protection, Fabric Drop	Each

Erosion Control, Inlet Protection, Fabric Drop will be paid for as one each for each time the alternate device listed herein is installed, maintained, and removed at a separate location within the project limits.

MICHIGAN
DEPARTMENT OF TRANSPORTATION

SPECIAL PROVISION
FOR
WRAPPING CULVERT AND STORM SEWER JOINTS

CFS:DMG 1 of 1 APPR:TRK:DBP:05-31-18
FHWA:APPR:05-31-18

Delete the last two sentences in the first paragraph of subsection 401.03.C, on page 185 of the Standard Specifications for Construction, and replace with the following:

Wrap all culvert pipe joints with geotextile blanket regardless of size and material type. The geotextile blanket must be at least 36 inches wide and installed on the pipe exterior, centered on the joint. The ends of the geotextile blanket must overlap by at least 12 inches.

Delete the last two sentences in the first paragraph of subsection 402.03.C, on page 195 of the Standard Specifications for Construction, and replace with the following:

Wrap all sewer pipe joints with geotextile blanket regardless of size and material type. The geotextile blanket must be at least 36 inches wide and installed on the pipe exterior, centered on the joint. The ends of the geotextile blanket must overlap by at least 12 inches.

MICHIGAN
DEPARTMENT OF TRANSPORTATION

SPECIAL PROVISION
FOR
CULVERT AND SEWER BEDDING AND BACKFILL

BRG:TRK 1 of 2 APPR:JJG:DMG:09-21-15
FHWA:APPR:10-05-15

Delete subsection 401.03.A, on page 185 of the Standard Specifications for Construction, in its entirety and replace with the following:

A. **Excavation and Culvert Bedding.** Excavate in accordance with subsection 206.03.A. Construct pipe culvert bedding using granular material Class IIIA. Bedding must be placed at least 4 inches thick and uncompacted for the entire length of the culvert. Where rock or hardpan is encountered, excavate the trench to at least 6 inches below the proposed bottom of the pipe; place bedding using uncompacted granular material Class IIIA.

Where unstable soil conditions, or obstructions other than rock, require excavation of the trench below the elevation detailed on the plans; undercut, backfill, and compact the trench as directed by the Engineer. Use 6A, 17A, or 34R aggregate as backfill material for undercutting due to unstable soil conditions. Use 34R aggregate for bedding material in lieu of granular material Class IIIA. Place the backfill up to approximately 4 inches below the proposed bottom of the pipe. This work will be paid for as trench undercut and backfill according to subsection 402.04.E.

Delete subsection 401.03.D, on page 187 of the Standard Specifications for Construction, in its entirety and replace with the following:

D. **Backfilling.** Backfill culverts, within the limits of the roadbed, with granular material Class II, III, or IIIA. Place backfill in layers no greater than 10 inches thick and compact each layer to at least 95 percent of the maximum unit weight.

Backfill culvert downspouts, culverts, or portions of culvert outside the limits of the roadbed with granular or suitable material as detailed on the plans. Compact thoroughly as directed by the Engineer. Maintain at least 3 feet of cover, unless trimming for final grade.

Backfill smooth lined CPE and CPV with granular material Class IIIA to at least 1 foot above the pipe and as shown on the plans. The Engineer may allow the use of Class II, Class III or suitable material as backfill above this elevation. Place the backfill in layers no greater than 10 inches. Place the backfill equally on opposite sides of the pipe at the same time.

Stake, or use other methods to maintain the line and grade of the culvert during the backfilling operation.

Delete the last sentence of the second paragraph of subsection 402.03.A, on page 195 of the Standard Specifications for Construction, and replace with the following:

Place bedding using uncompacted granular material Class IIIA to the required elevation.

Delete the third paragraph of subsection 402.03.A, on page 195 of the Standard Specifications for Construction, and replace with the following:

Where unstable soil conditions, or obstructions other than rock, require excavation of the trench below the elevation detailed on the plans; undercut, backfill, and compact the trench as directed by the Engineer. Use 6A, 17A, or 34R aggregate as backfill material for undercutting due to unstable soil conditions. Use 34R aggregate for bedding material in lieu of granular material Class IIIA. Place the backfill up to approximately 4 inches below the proposed bottom of the pipe. This work will be paid for as trench undercut and backfill according to subsection 402.04.E.

MICHIGAN
DEPARTMENT OF TRANSPORTATION

SPECIAL PROVISION
FOR
SAMPLING ASPHALT BINDER ON LOCAL AGENCY PROJECTS

CFS:MF 1 of 1 APPR:JAR:JTL:12-19-01
FHWA:CON. APPR:06-06-11

For informational purposes, original samples of asphalt binder will be taken by the Contractor and delivered to the Engineer prior to incorporation into the mixture. The frequency of sampling will be determined by the Engineer. The cost of obtaining and delivering the samples to the Engineer will be included in the hot mix asphalt (HMA) pay items.

The Contractor must certify in writing that the materials used in the HMA mixture are from the same source as the materials used in developing the HMA mixture design and the bond coat is from an approved supplier as stated in the *Material Quality Assurance Procedures Manual*.

MICHIGAN
DEPARTMENT OF TRANSPORTATION

SPECIAL PROVISION
FOR
WARM-MIX ASPHALT PERMISSIVE USE FOR LOCAL AGENCY PROJECTS

CFS:KPK 1 of 1 APPR:CJB:JWB:07-05-16
FHWA APPR:07-05-16

a. Description. This work consists of furnishing a Warm-Mix Asphalt (WMA) mixture using a water-injection foaming device or water foaming additive in lieu of the standard Hot Mix Asphalt (HMA) specified if the Contractor elects to do so. Ensure all work is in accordance with the standard specifications and applicable special provisions, except as modified herein. No deviations to acceptance test methods/procedures will be allowed.

b. Materials. Provide materials in accordance with contract for HMA mixtures.

Base lab testing temperatures for compaction of samples on the binder suppliers recommended value.

c. Construction.

1. Equipment. Provide equipment for the water-foaming additive or water-foaming injection device that is attached to the HMA plant.

2. Placing WMA. The Engineer will reject loads with a temperature either below 250 degrees Fahrenheit (F) or greater than +20 degrees F from the recommended maximum mixing temperature specified by the binder producer at the time of discharge from behind the screed.

d. Measurement and Payment. If the Contractor elects to provide a WMA mixture as a substitute for the specified HMA mixture as discussed above, this will be done with the understanding that the pay items in the original contract will not be changed and the WMA will be provided under those original pay items at the bid prices submitted.

MICHIGAN
DEPARTMENT OF TRANSPORTATION

SPECIAL PROVISION
FOR
RECYCLED HOT MIX ASPHALT MIXTURE ON LOCAL AGENCY PROJECTS

CFS:KPK 1 of 2 APPR:JWB:CJB:03-13-14
FHWA:APPR:03-13-14

Add the following subsection to subsection 501.02.A.2, on page 234 of the Standard Specifications for Construction.

c. **Reclaimed Asphalt Pavement (RAP) and Binder Grade Selection**. The method for determining the binder grade in HMA mixtures incorporating RAP is divided into three categories designated Tier 1, Tier 2 and Tier 3. Each tier has a range of percentages that represent the contribution of the RAP binder toward the total binder, by weight. The tiers identified below apply to HMA mixtures with the following exception: Superpave mixture types E3, E3 High Stress, E10, E10 High Stress, E30, E30 High Stress, E50, and E50 High Stress used as leveling or top course must be limited to a maximum of 27 percent RAP binder by weight of the total binder in the mixture.

Recycled materials may be used as a substitute for a portion of the new materials required to produce HMA mixtures in accordance with contract.

- **Tier 1 (0% to 17% RAP binder by weight of the total binder in the mixture).** No binder grade adjustment is made to compensate for the stiffness of the asphalt binder in RAP.

- **Tier 2 (18% to 27% RAP binder by weight of the total binder in the mixture).** For all mixtures no binder grade change will occur in Tier 2 for all shoulder and temporary road mixtures.

  The required asphalt binder grade must be at least one grade lower for the low temperature than the design binder grade required for the specified project mixture type. Lowering the high temperature of the binder one grade is optional. For example, if the design binder grade for the mixture type is PG 58-22, the required grade for the binder in the HMA mixture containing RAP would be a PG 52-28 or a PG 58-28.

  For Marshall Mixes, no binder grade change will be required when Average Daily Traffic (ADT) is above 7000 or Commercial Average Daily Traffic (CADT) is above 700. No binder grade change will occur for LVSP, E03 and E1 mixtures used as leveling or top course.

  The asphalt binder grade can also be selected using a blending chart for high and low temperatures. Supply the blending chart and the RAP test data used in determining the binder selection according to *AASHTO M 323*.

- **Tier 3 (≥ 28% RAP binder by weight of the total binder in the mixture).** The binder

grade for the asphalt binder is selected using a blending chart for high and low temperatures per *AASHTO M 323*. Supply the blending chart and the RAP test data used in determining the binder selection.

MICHIGAN
DEPARTMENT OF TRANSPORTATION

SPECIAL PROVISION
FOR
ACCEPTANCE OF HOT MIX ASPHALT MIXTURE ON LOCAL AGENCY PROJECTS

CFS:KPK 1 of 7 APPR:CJB:JWB:07-05-16
FHWA:APPR:07-05-16

a. Description. This special provision provides sampling and testing requirements for local agency projects using the roller method and the nuclear density gauge testing. Provide the hot mix asphalt (HMA) mixture in accordance with the requirements of the standard specifications, except where modified herein.

b. Materials. Provide aggregates, mineral filler (if required), and asphalt binder to produce a mixture proportioned within the master gradation limits shown in the contract, and meeting the uniformity tolerance limits in Table 1.

Table 1: Uniformity Tolerance Limits for HMA Mixtures

Parameter			Top and Leveling Course		Base Course	
Number	Description		Range 1 (a)	Range 2	Range 1 (a)	Range 2
1	% Binder Content		-0.30 to +0.40	±0.50	-0.30 to +0.40	±0.50
2	% Passing	# 8 and Larger Sieves	±5.0	±8.0	±7.0	±9.0
		# 30 Sieve	±4.0	±6.0	±6.0	±9.0
		# 200 Sieve	±1.0	±2.0	±2.0	±3.0
3	Crushed Particle Content (b)		Below 10%	Below 15%	Below 10%	Below 15%

a. This range allows for normal mixture and testing variations. The mixture must be proportioned to test as closely as possible to the Job-Mix-Formula (JMF).
b. Deviation from JMF.

Parameter number 2 as shown in Table 1 is aggregate gradation. Each sieve will be evaluated on one of the three gradation tolerance categories. If more than one sieve is exceeding Range 1 or Range 2 tolerances, only the one with the largest exceedance will be counted as the gradation parameter.

The master gradation should be maintained throughout production; however, price adjustments will be based on Table 1. Aggregates which are to be used in plant-mixed HMA mixtures must not contain topsoil, clay, or loam.

c. Construction. Submit a Mix Design and a JMF to the Engineer. Do not begin production and placement of the HMA until receipt of the Engineer's approval of the JMF. Maintain the binder content, aggregate gradation, and the crushed particle content of the HMA mixture within the Range 1 uniformity tolerance limits in Table 1. For mixtures meeting the definition of top or leveling course, field regress air void content to 3.5 percent with liquid asphalt cement unless

specified otherwise on HMA application estimate. For mixtures meeting the definition of base course, field regress air void content to 3.0 percent with liquid asphalt cement unless specified otherwise on HMA application estimate.

Ensure all persons performing Quality Control (QC) and Quality Assurance (QA) HMA field sampling are "Local Agency HMA Sampling Qualified" samplers. At the Pre-Production or Pre-Construction meeting, the Engineer will determine the method of sampling to be used. Ensure all sampling is done in accordance with *MTM 313 (Sampling HMA Paving Mixtures)* or *MTM 324 (Sampling HMA Paving Mixtures Behind the Paver)*. Samples are to be taken from separate hauling loads.

For production/mainline type paving, obtain a minimum of two samples, each being 20,000 grams, each day of production, for each mix type. The Engineer will sample and maintain possession of the sample. Sampling from the paver hopper is prohibited. Each sample will be divided into two 10,000 gram parts with one part being for initial testing and the other part being held for possible dispute resolution testing. Obtain a minimum of three samples for each mix type regardless of the number of days of production.

Obtain samples that are representative of the day's paving. Sample collection is to be spaced throughout the planned tonnage. One sample will be obtained in the first half of the tonnage and the second sample will be obtained in the second half of the tonnage. If planned paving is reduced or suspended, when paving resumes, the remaining sampling must be representative of the original intended sampling timing.

Ensure all persons performing testing are Bit Level One certified or Bit QA/QC Technician certified.

Ensure daily test samples are obtained, except, if the first test results show that the HMA mixture is in specification, the Engineer has the option of not testing additional samples from that day.

At the Pre-Production or Pre-Construction meeting, the Engineer and Contractor will collectively determine the test method for measuring asphalt content (AC) using *MTM 319 (Determination of Asphalt Content from Asphalt Paving Mixtures by the Ignition Method)* or *MTM 325 (Quantitative Extraction of Bitumen from HMA Paving Mixtures)*. Back calculation will not be allowed for determining asphalt content.

Ensure all labs performing local agency acceptance testing are qualified labs per the *HMA Production Manual* and participate in the MDOT round robin process, or they must be *AASHTO Materials Reference Laboratory* (AMRL) accredited for *AASHTO T 30* or *T 27*, and *AASHTO T 164* or *T 308*. Ensure on non-National Highway System (NHS) routes, Contractor labs are made available, and may be used, but they must be qualified labs as previously stated. Contractor labs may not be used on NHS routes. Material acceptance testing will be completed by the Engineer within 14 calendar days, except holidays and Sundays, for projects with less than 5,000 tons (plan quantity) of HMA and within 7 calendars days, except holidays and Sundays, for projects with 5,000 tons (plan quantity) or more of HMA, after the Engineer has obtained the samples. QA test results will be provided to the Contractor after the Engineer receives the QC test results. Failure on the part of the Engineer or the laboratory to provide Quality Assurance test results within the specified time frame does not relieve the Contractor of their responsibility to provide an asphalt mix within specifications.

The correlation procedure for ignition oven will be established as follows. Asphalt binder content based on ignition method from MTM 319. Gradation (*ASTM D 5444*) and Crushed particle content *(MTM 117)* based on aggregate from *MTM 319*. The incineration temperature will be established at the Pre-Production Meeting. The Contractor will provide a laboratory mixture sample to the acceptance laboratory to establish the correction factor for each mix. Ensure this sample is provided to the Engineer a minimum of 14 calendar days prior to production.

For production/mainline type paving, the mixture may be accepted by visual inspection up to a quantity of 500 tons per mixture type, per project (not per day). For non-production type paving defined as driveways, approaches, and patching, visual inspection may be allowed regardless of the tonnage.

The mixture will be considered out-of-specification, as determined by the acceptance tests, if for any one mixture, two consecutive tests per parameter, (for Parameter 2, two consecutive aggregate gradations on one sieve) are outside Range 1 or Range 2 tolerance limits. If a parameter is outside of Range 1 tolerance limits and the second consecutive test shows that the parameter is outside of Range 2, then it will be considered to be a Range 1 out-of-specification. Consecutive refers to the production order and not necessarily the testing order. Out-of-specification mixtures are subject to a price adjustment per the Measurement and Payment section of this special provision.

Contractor operations will be suspended when the mixture is determined to be out-of-specification, but contract time will continue to run. The Engineer may issue a Notice of Non-Compliance with Contract Requirements (Form 1165), if the Contractor has not suspended operations and taken corrective action. Submit a revised JMF or proposed alterations to the plant and/or materials to achieve the JMF to the Engineer. Effects on the Aggregate Wear Index (AWI) and mix design properties will be taken into consideration. Production and placement cannot resume until receipt of the Engineer's approval to proceed.

Pavement in-place density will be measured using one of two approved methods. The method used for measuring in-place density will be agreed upon at a pre-production or pre-construction meeting.

Pavement in-place density tests will be completed by the Engineer during paving operations and prior to traffic staging changes. Pavement in-place density acceptance testing will be completed by the Engineer prior to paving of subsequent lifts and being open to traffic.

Option 1 – Direct Density Method

Use of a nuclear density gauge requires measuring the pavement density using the Gmm from the JMF for the density control target. The required in-place density of the HMA mixture must be 92.0 to 98.0 percent of the density control target. Nuclear density testing and frequency will be in accordance with the *MDOT Density Testing and Inspection Manual*.

Option 2 – Roller Method

The Engineer may use the Roller Method with a nuclear or non-nuclear density gauge to document achieving optimal density as discussed below.

Use of the density gauge requires establishing a rolling pattern that will achieve the required in-place density. The Engineer will measure pavement density with a density gauge using the Gmm from the JMF for the density control target.

Use of the Roller Method requires developing and establishing density frequency curves, and meeting the requirements of Table 2. A density frequency curve is defined as the measurement and documentation of each pass of the finished roller until the in-place density results indicate a decrease in value. The previous recording will be deemed the optimal density. The Contractor is responsible for establishing and documenting an initial or QC rolling pattern that achieves the optimal in-place density. When the density frequency curve is used, the Engineer will run and document the density frequency curve for each half day of production to determine the number of passes to achieve the maximum density. Table 5, located at the end of this special provision, can be used as an aid in developing the density frequency curve. The Engineer will perform density tests using an approved nuclear or non-nuclear gauge per the manufacturer's recommended procedures.

Table 2: Minimum Number of Rollers Recommended Based on Placement Rate

Average Laydown Rate, Square Yards per Hour	Number of Rollers Required (a)	
	Compaction	Finish
Less than 600	1	1 (b)
601 - 1200	1	1
1201 - 2400	2	1
2401 - 3600	3	1
3601 and More	4	1

a. Number of rollers may increase based on density frequency curve.
b. The compaction roller may be used as the finish roller also.

After placement, roll the HMA mixture as soon after placement as the roller is able to bear without undue displacement or cracking. Start rolling longitudinally at the sides of the lanes and proceed toward the center of the pavement, overlapping on successive trips by at least half the width of the drum. Ensure each required roller is 8 tons minimum in weight unless otherwise approved by the Engineer.

Ensure the initial breakdown roller is capable of vibratory compaction and is a maximum of 500 feet behind the paving operations. The maximum allowable speed of each roller is 3 miles per hour (mph) or 4.5 feet per second. Ensure all compaction rollers complete a minimum of two complete rolling cycles prior to the mat temperature cooling to 180 degrees Fahrenheit (F). Continue finish rolling until all roller marks are eliminated and no further compaction is possible. The Engineer will verify and document that the roller pattern has been adhered to. The Engineer can stop production when the roller pattern is not adhered to.

d. Measurement and Payment. The completed work, as described, will be measured and paid for using applicable pay items as described in subsection 501.04 of the Standard Specifications for Construction, or the contract, except as modified below.

Base Price. Price established by the Department to be used in calculating incentives and adjustments to pay items and shown in the contract.

If acceptance tests, as described in section c. of this special provision, show that a Table 1 mixture parameter exceeds the Range 1, but not the Range 2, tolerance limits, that mixture parameter will be subject to a 10 percent penalty. The 10 percent penalty will be assessed based on the acceptance tests only unless the Contractor requests that the 10,000 gram sample part retained for possible dispute resolution testing be tested. The Contractor has 4 calendar days from receipt of the acceptance test results to notify the Engineer, in writing, that dispute resolution testing is requested. The Contractors QC test results for the corresponding QA test results must result in an overall payment greater than QA test results otherwise the QA tests will not be allowed to be disputed. The Engineer has 4 calendar days to send the dispute resolution sample to the lab once dispute resolution testing is requested. The dispute resolution sample will be sent to an independent lab selected by the Local Agency, and the resultant dispute test results will be used to determine the penalty per parameter, if any. Ensure the independent lab is a MDOT QA/QC qualified lab or an AMRL HMA qualified lab. The independent lab must not have conflicts of interest with the Contractor or Local Agency. If the dispute testing results show that the mixture parameter is out-of-specification, the Contractor will pay for the cost of the dispute resolution testing and the contract base price for the material will be adjusted, based on all test result parameters from the dispute tests, as shown in Table 3 and Table 4. If the dispute test results do not confirm the mixture parameter is out-of-specification, then the Local Agency will pay for the cost of the dispute resolution testing and no price adjustment is required.

If acceptance tests, as described in section c. of this special provision, show that a Table 1 mixture parameter exceeds the Range 2 tolerance limits, the 10,000 gram sample part retained for possible dispute resolution testing will be sent, within 4 calendar days, to the MDOT Central Laboratory for further testing. The MDOT Central Laboratory's test results will be used to determine the penalty per mixture parameter, if any. If the MDOT Central Laboratory's results do not confirm the mixture parameter is out-of-specification, then no price adjustment is required. If the MDOT Central Laboratory's results show that the mixture is out-of-specification and the Engineer approves leaving the out-of-specification mixture in place, the contract base price for the material will be adjusted, based on all parameters, as shown in Table 3 and Table 4.

In the case that the Contractor disputes the results of the test of the second sample obtained for a particular day of production, the test turn-around time frames given would apply to the second test and there would be no time frame on the first test.

The laboratory (MDOT Central Laboratory or independent lab) will complete all Dispute Resolution testing and return test results to the Engineer, who will provide them to the Contractor, within 13 calendar days upon receiving the Dispute Resolution samples.

In all cases, when penalties are assessed, the penalty applies to each parameter, up to two parameters, that is out of specification.

Table 3: Penalty Per Parameter

Mixture Parameter out-of-Specification per Acceptance Tests	Mixture Parameter out-of-Specification per Dispute Resolution Test Lab	Price Adjustment per Parameter
NO	N/A	None
YES	NO	None
	YES	Outside Range 1 but not Range 2: decrease by 10%
		Outside Range 2: decrease by 25%

The quantity of material receiving a price adjustment is defined as the material produced from the time the first out-of-specification sample was taken until the time the sample leading to the first in-specification test was taken.

Each parameter of Table 1 is evaluated with the total price adjustment applied to the contract base price based on a sum of the two parameter penalties resulting in the highest total price adjustment as per Table 4. For example, if three parameters are out-of-specification, with two parameters outside Range 1 of Table 1 tolerance limits, but within Range 2 of Table 1 limits and one parameter outside of Range 2 of Table 1 tolerance limits and the Engineer approves leaving the mixture in place, the total price adjustment for that quantity of material is 35 percent.

Table 4: Calculating Total Price Adjustment

Cost Adjustment as a Sum of the Two Highest Parameter Penalties		
Number of Parameters Out-of-Specification	Range(s) Outside of Tolerance Limits of Table 1 per Parameter	Total Price Adjustment
One	Range 1	10%
	Range 2	25%
Two	Range 1 & Range 1	20%
	Range 1 & Range 2	35%
	Range 2 & Range 2	50%
Three	Range 1, Range 1 & Range 1	20%
	Range 1, Range 1 & Range 2	35%
	Range 1, Range 2 & Range 2	50%
	Range 2, Range 2 & Range 2	50%

Table 5: Density Frequency Curve Development

Tested by: _____ Date/Time: _____

Route/Location:		Air Temp:
Control Section/Job Number:		Weather:
Mix Type:	Tonnage:	Gauge:
Producer:	Depth:	Gmm:

Roller #1 Type:

Pass No.	Density	Temperature	Comments
1			
2			
3			
4			
5			
6			
7			
8			
Optimum			

Roller #2 Type:

Pass No.	Density	Temperature	Comments
1			
2			
3			
4			
5			
6			
7			
8			
Optimum			

Roller #3 Type:

Pass No.	Density	Temperature	Comments
1			
2			
3			
4			
5			
6			
7			
8			
Optimum			

Summary: _____

_____

_____

_____

_____

MICHIGAN
DEPARTMENT OF TRANSPORTATION

SPECIAL PROVISION
FOR
QUALITY CONTROL AND ACCEPTANCE OF PORTLAND CEMENT CONCRETE (FOR LOCAL AGENCY PROJECTS ONLY)

CFS:JFS 1 of 21 APPR:TES:DBP:06-14-19
FHWA:APPR:06-14-19

a. Description. The Contractor must administer quality control (QC) and the Department will administer quality assurance (QA) procedures that will be used for acceptance of and payment for all Portland cement concrete (PCC) for the project. Except as explicitly modified by this special provision, all materials, test methods, and PCC mixture requirements of the standard specifications and the contract apply.

Do not place concrete until the Engineer's daily startup testing verifies that the fresh concrete properties have been met, in accordance with subsection d.2 of this special provision.

Provide the Engineer a minimum 24 hours notification prior to each concrete placement.

1. Terminology.

Air Content of Fresh Concrete. The recorded total air content of fresh concrete sampled and tested according to this special provision.

Air Content Test Results. The recorded air content of fresh concrete corresponding to the strength test specimens that were molded for acceptance.

Alkali-Silica Reactivity (ASR). A chemical reaction which occurs over time within concrete between high alkaline cement paste and reactive forms of silica found in some aggregates. In the presence of moisture, an expansive ASR gel is formed which can exert pressure within the concrete, causing random cracking and premature deterioration of the concrete. See subsection c.5.A of this special provision.

Base Price. Price established by the Department to be used in calculating incentives or adjustments to pay items and shown in the contract.

Concrete Mix Design. The process, by which the concrete mixture performance characteristics are defined, based on selected materials, performance requirements, environmental exposure considerations, placement methods, and other factors that control the plastic and hardened properties of the concrete in efforts to produce an economical and durable product.

Job Mix Formula (JMF). The actual batch quantities (mixture proportions) of each constituent included in the concrete mixture, based on adjustments to the target weights attained from the mix design process, necessary to optimize the concrete mixture properties.

Pay Factor (PF). The factor that is determined according to subsections d.3 of this special provision, used to calculate the price adjustment for a discrete quantity of concrete relative

to its respective level of quality. Pay factor will not exceed 1.00. Therefore, there will never be a positive pay adjustment.

Price Adjustment (ADJ). The price adjustment applied to the quantity of concrete represented by the respective quality index analysis described in subsections d.3 of this special provision.

Production Lot. A discrete cubic yard quantity of concrete containing the same JMF and used for the same application, as described in subsection d.2 of this special provision.

Quality Assurance (QA). Activities administered by the Engineer dealing with acceptance of the product, including, but not limited to, materials selection, sampling, testing, construction inspection, and review of Contractor QC documentation. All concrete QA sampling and testing will be administered by the Department. Department administered QA is described in section d of this special provision.

Quality Control (QC). All activities administered by the Contractor to monitor, assess, and adjust production and placement processes to ensure the final product will meet the specified levels of quality, including, but not limited to, training, materials selection, sampling, testing, project oversight and documentation. Contractor administered QC is described in section c of this special provision.

QC Action Limits. A range of values established by the Contractor in the QC plan that, if exceeded, requires that corrective action be taken by the Contractor to restore the continuity and uniformity of the mixture and methods in conformance with specification requirements. The QC action limits must not exceed the QC suspension limits.

QC Plan. The project-specific plan developed by the Contractor describing, in detail, all aspects of production and construction for the project to ensure consistent control of quality to meet specification requirements.

QC Plan Administrator. An employee of, or consultant engaged by the Contractor, responsible for developing and overseeing all aspects of QC for the project. This includes, but is not limited to preparing the QC plan, managing the Contractor QC personnel, communicating routinely with the production personnel to ensure quality, initiating corrective action and suspending operations when the process is found to be producing non-conforming materials, and preparing and submitting all necessary QC documentation to the Engineer within the specified time period.

QC Suspension Limits. A range of values defined in Table 1 that, if exceeded on a single QC test, requires that the Contractor suspend operations and determine, correct, and document the deficiencies before resuming production. The QC suspension limit must not exceed specification requirement thresholds.

Sample. A representative quantity of concrete taken during production which is used to measure the quality characteristics for the concrete.

Sampling Rate. The number of times the fresh concrete is sampled, as described in subsection d.2 of this special provision.

Small Incidental Quantity. A single day's placement of less than 20 cubic yards of concrete used for non-structural or non-pavement related applications, including, but not limited to:

curb and gutter, sidewalks and sidewalk ramps (excluding driveways and driveway ramps), installing sign or fence posts, guard rail or cable rail foundations (excluding end anchorage foundations), or other contract items where the small quantity of concrete is not paid for separately, as approved by the Engineer. Requirements for small incidental quantity consideration are described in subsections c.5.G, d.2.B and d.3 of this special provision. The corresponding weekly QA test results must meet specification limits defined in Table 3.

Specification Limits. The threshold values placed on a quality characteristic used to evaluate the quality of the material.

Strength Sample Test Result. The average of the two companion 28-day compressive strength test specimens taken from the same sample of concrete is considered a strength sample test result.

Strength Test Specimen. A strength test specimen is an individual 6-inch by 12-inch strength test cylinder or 4-inch by 8-inch strength test cylinder molded and cured according to *AASHTO T23/ASTM C 31* and tested according to *AASHTO T22/ASTM C 39*. All respective QC or QA strength test specimens must be the same nominal size. Strength test specimen cylinder size of 4-inch by 8-inch is permitted only if the nominal maximum coarse aggregate particle size, as specified for the coarse aggregate in the concrete mixture, is 1-inch, or less.

Sublot. A portion of a production lot, represented by a complete set of QA tests, as described in subsection d.2.A of this special provision. The Engineer and the Contractor may agree to reduce the typical sublot size based on project staging or other project conditions.

Supplementary Cementitious Materials (SCM). A mineral admixture (slag cement, fly ash) used to replace a portion of the Portland cement, either individually or as a blended cement, in the concrete mixture. SCM requirements are described in subsection c.5 of this special provision.

b. Materials. Mixture requirements must be in accordance with the contract.

c. Contractor Administered Quality Control (QC).

1. Contractor Quality Control Plan (QC plan). Prepare, implement, and maintain a QC plan specific to the project for concrete that will provide quality oversight for production, testing, and control of construction processes. The QC plan must be in conformance with the contract and must identify all procedures used to control production and placement including when to initiate corrective action necessary to maintain the quality and uniformity of the work.

Develop concrete mix designs and JMFs, as specified, and conduct QC sampling, testing, and inspection during all phases of the concrete work at the minimum frequency, or at an increased frequency sufficient to ensure that the work conforms to specification requirements.

Project-specific items required in the QC plan include (where applicable), but are not limited to the following:

A. Organization chart.

B. QC Plan Administrator and contact information.

C. The name(s) and credentials of the QC staff.

D. Methods for interaction between production and QC personnel to engage timely corrective action, including suspension of work.

E. Coordination of activities.

F. Documentation, procedures, and submittals.

G. Project and plant specifics.

H. Concrete production facilities inspections and certifications.

I. Current testing equipment calibration documentation including calibration factor.

J. Testing and initial field curing facilities for QC and QA strength test specimens (AASHTO T23/ASTM C 31).

K. Stockpile management plan.

L. Corrective action plan.

M. Mixing time and transportation, including time from batching to completion of delivery and batch placement rate (batches per hour), along with the manufacturer's documentation relative to the batching equipment's capabilities in terms of maximum mixing capacity and minimum mixing time (*ASTM C 94*).

N. Placement and consolidation methods including monitoring of vibration, depth checks, and verification of pavement dowel bar alignment.

O. Process for monitoring stability of air content of fresh concrete during concrete production and placement.

P. Hot and cold weather protection considerations and methods.

Q. Control charts with action and suspension limits.

R. Verification for non-deleterious alkali-silica reactivity (see subsection c.5.A of this special provision).

S. Mix design and JMFs.

T. Proposed production lot size and location for use of each JMF on the project.

U. The frequency of sampling, testing, and yield verification.

V. Handling, protection, initial curing, and transporting of strength test specimens (*AASHTO T23/ASTM C31*).

W. Methods to monitor construction equipment loading and open-to-traffic strengths.

X. Finishing and curing procedure.

Y. Ride quality control.

Z. List of QC records to be submitted to the Engineer in accordance with subsection c.2 of this special provision.

Submit the QC plan, for the appropriate items of work, to the Engineer for review a minimum of 10 working days before the start of related work. The Engineer will notify the Contractor of any objections relative to the content of the QC plan within 5 working days of receipt of the QC plan. Do not begin concrete placement before acceptance of the QC plan by the Engineer. If the approved QC plan fails to provide acceptable work, or acceptable control of the work, the Engineer may require the Contractor to revise the QC plan. Revisions to the QC plan must be approved by the Engineer prior to resuming work.

2. QC Records. Maintain complete records of all QC tests and inspections. Document what action was taken to correct deficiencies. Include sufficient information to allow the test results to be correlated with the items of work represented.

Furnish one copy of all QC records, including test reports for the fresh concrete placement, to the Engineer within 24 hours after the date covered by the record in a format acceptable to the Engineer. The Engineer will withhold acceptance of the concrete for failure to provide properly documented and timely QC records and reports.

If the Engineer is performing QA sampling and testing at the same time the Contractor is performing QC sampling and testing, all associated QC records must include the appropriate production lot identification number that correlates with the Department's QA production lot identification number.

3. Personnel Requirements. The QC Plan Administrator must have full authority and responsibility to take all actions necessary for the successful implementation of the QC plan, including but not limited to, the following:

A. Monitoring and utilizing QC tests, control charts, and other QC practices to ensure that delivered materials and proportioning meets specification requirements.

B. Monitoring materials shipped to the project, prior to their use, to ensure their continued compatibility toward producing consistent quality.

C. Periodically inspecting all equipment utilized in transporting, proportioning, mixing, placing, consolidating, finishing, and curing to ensure proper operation.

D. Monitoring materials stockpile management, concrete batching, mixing, transporting, placement, consolidation, finishing, and curing to ensure conformance with specification requirements.

E. Maintaining and submitting all QC records and reports.

F. Directing the necessary corrective action to ensure continual conformance within

the QC action limits.

G. Suspending production for the project when suspension limits are exceeded.

H. Conducting or monitoring adjustments to the JMF.

Individuals performing QC tests must demonstrate that they are proficient and capable of sampling and testing concrete or aggregate, where applicable, in accordance with the associated test procedures and Department requirements prior to commencement of related work. Any adjustments to the JMF must be made by a certified concrete technician (Michigan Concrete Association (MCA) Michigan Level II).

4. QC Laboratory Requirements. Laboratories, including field laboratories and all associated testing equipment that prepare concrete mixes or perform QC testing, must demonstrate to the Engineer that they are equipped, staffed, calibrated, and managed so as to be capable of batching, and testing PCC in accordance with the applicable test methods and procedures. Mix designs and their accompanying JMFs must include a statement, signed by a certified concrete technician (MCA Michigan Level II), that all applicable standard test methods have been followed in verifying the mix design and JMF.

5. Mix Design and Documentation. Design concrete mixtures meeting the requirements specified in Table 1. Provide the grade of concrete for the section number reference application specified in Table 1, or as specified in the contract. Request variance in writing when proposing a mix design that exhibits temperature, slump or air content other than those specified. Include the proposed mix design, JMF, and associated trial batch verification test data. Do not use a grade of concrete with a lower specification limit (LSL) 28-day compressive strength greater than what is designated for the application.

Blended cement meeting the requirements of *ASTM C 595 Type IL* is permitted.

Ensure supplementary cementitious materials are from an MDOT Approved Manufacturer. Slag cement must meet the requirements of subsection 901.06 of the Standard Specifications for Construction. Fly ash must meet the requirements of subsection 901.07 of the Standard Specifications for Construction.

Secure prior approval from the Engineer to use concrete intended for early opening to traffic to facilitate driveway gaps or other features necessary for required local access.

Unless otherwise specified in the contract, set accelerating admixtures are prohibited.

Optimized aggregate gradation is required for high performance concrete and concrete mixtures that are placed using a pump. Concrete mixtures for tremie and drilled shaft applications do not require optimized aggregate gradation. The physical requirements for coarse and intermediate aggregates specified in subsection 902.03.C of the Standard Specifications for Construction apply to high performance concrete pavement mixtures. The physical requirements for aggregates used in concrete mixtures for all other applications will be according to the contract.

Unless otherwise specified in the contract, provide either concrete Grade P1 or Grade D for bridge approach slab applications.

Unless otherwise specified in the contract, do not exceed 40 percent replacement of the Portland cement in the concrete mixture with a supplementary cementitious material. Do not exceed 40 percent total replacement of the Portland cement if more than one supplementary cementitious material is used in the concrete mixture.

Use the combined weight of all cementitious materials to determine compliance with the maximum water-cementitious ratio and cementitious material content requirements specified in Table 1.

For night casting, where applicable, a water-reducing admixture may be used in lieu of a water-reducing and retarding admixture, provided the concrete can be placed and finished in the sequence specified on the plans prior to initial set, is not subjected to residual vibration, or is not within the areas influenced by dead load deflections as a result of adjacent concrete placement operations. When the maximum air temperature is not forecast to exceed 60 degrees F for the day, the Contractor may use a water-reducing admixture or a water-reducing retarding admixture.

Table 1: Minimum Mix Design Requirements for Concrete

Mix Design Parameter	Grade of Concrete						
	P1M (a,b,e)	P1 (a,b)	D,DM (a,b,e)	T	S1 (a)	S2,S2M (a,b,e)	S3/P2 (a)
Lower Specification Limit (LSL) (28-day compressive, psi)	3500	3500	4500	3500	4000	3500	3000
Rejection Limit for an Individual Strength Sample Test Result	3000	3000	4000	3000	3500	3000	2500
Maximum Water/Cementitious Ratio (lb/lb) (c)	0.45						
Cementitious Material Content (lb/yd3) (d)	470-564	517-611	517-658	517-611	517-611	517-611	489-517
Air Content (percent) (f)	5.5-8.5						
Slump (inch) (max.)	(g)						
Section Number Reference (h)	602, 603	602, 603, 801, 802, 803, 810	706, 711, 712	706, 718	705	401, 706, 712, 713, 718, 801, 802, 803, 810, 819	402, 403, 602, 803, 804, 806, 808, 810, 813, 814

a. If the local average minimum temperature in the next 10 consecutive days is forecast to be below 40 degrees F, submit a revised QC plan for the Engineer's approval, addressing in detail changes in materials, concrete batching and mixing processes, construction methods, curing, and protection of the in situ concrete to ensure that the necessary quality characteristics of the hardened concrete product will not be compromised as a result of the cold weather. The revised QC plan must be approved by the Engineer prior to cold weather concrete placement. Do not remove supplementary cementitious material from the concrete mixture.

b. Use aggregates from only geologically natural sources for pavement, shoulder, miscellaneous pavement (including ramps), concrete pavement overlay, bridge approach slab, structural concrete, drilled shaft, bridge railing, and bridge sidewalk applications.

c. Use admixtures as listed in the Qualified Products Lists to reduce mixing water. Ensure concrete in concrete diaphragms contains a water-reducing admixture, or a water-reducing retarding admixture.

d. Type III cement is not permitted.

e. For grades of concrete requiring optimized gradation, aggregates must meet the physical requirements specified in subsection 902.03.C of the Standard Specifications for Construction.

f. For action, suspension, and specification limits, see Tables 2 and 3, where applicable.

g. The maximum slump for Grades P1, P1M, and P2 concrete is 3 inches or as documented on the approved JMF. All other grades of concrete will be according to Table 701-1 of the Standard Specifications for Construction.

h. Section Number Reference:

401 Pipe Culverts
403 Drainage Structures
603 Concrete Pavement Restoration
706 Structural Concrete Construction
712 Bridge Rehabilitation-Concrete
718 Drilled Shafts
802 Concrete Curb, Gutter and Dividers
804 Concrete Barriers and Glare Screens
808 Fencing
813 Slope Protection
819 Electrical and Lighting
402 Storm Sewers
602 Concrete Pavement Construction
705 Foundation Piling
711 Bridge Railings
713 Bridge Rehabilitation-Steel
801 Concrete Driveways
803 Concrete Sidewalk, Sidewalk Ramps, and Steps
806 Shared Use Paths
810 Permanent Traffic Signs and Supports
814 Paved Ditches

A. Alkali-Silica Reactivity. Provide documentation to the Engineer that the concrete mixture does not present the potential for deleterious expansion caused by alkali-silica reactivity (ASR). Provide current ASR test results (valid for 2 years from completion of testing), for the fine aggregate that is proposed to be used in the concrete, from an independent testing laboratory proficient in ASR testing. The independent testing laboratory must certify in writing, including a signed statement that all testing was conducted in accordance with the designated standard test procedures, described herein. Test results must conform to the specified criterion for one of the following standard test methods. ASR testing is not required for concrete pavement repairs and temporary concrete pavements. Use the Rounding Method described in *ASTM E 29* when determining significant digits for reporting expansion test results.

(1) Method 1. *ASTM C 1293*. Concrete Prism Test. If the expansion of concrete prisms is not greater than 0.040 percent (rounded to the nearest 0.001 percent) after 1 year, the fine aggregate is considered non-deleterious to ASR and may be used in the JMF.

(2) Method 2. *ASTM C 1567*. Mortar Bar Test. If no previous test data are available for the fine aggregate that shows it is resistant to ASR using Method 1, above, replace 25 to 40 percent of the Portland cement in the concrete mixture with a supplementary cementitious material. A blended cement meeting the requirements of *ASTM C 595* containing the above Portland cement and supplementary cementitious material proportions may also be used.

Demonstrate the ability of the supplementary cementitious material to control the deleterious expansion caused by ASR by molding and testing mortar bars according to the standard test method described in *ASTM C 1567* using the mix proportions and constituent sources for both the aggregates and the cementitious materials that will be used for the project. Make at least three test specimens for each cementitious materials-aggregate combination. If the average of three mortar bars for a given cementitious materials-aggregate combination produces an expansion less than 0.10 percent (rounded to the nearest 0.01 percent) at 14 days of immersion, the JMF associated with that combination will be considered non-deleterious to ASR. If the average expansion is 0.10 percent (rounded to the nearest 0.01 percent) or greater, the JMF associated with that combination will be considered not sufficient to control the deleterious expansion caused by ASR and the JMF will be rejected.

(3) Method 3. *ASTM C 1260*. Mortar Bar Test. If the expansion of the mortar bars is less than 0.10 percent (rounded to the nearest 0.01 percent) at 14 days of immersion, the fine aggregate is considered non-deleterious to ASR and may be used in the concrete without the need for ASR mitigation.

The Engineer will not approve the use of the JMF if the expansion exceeds the respective threshold limits for the respective ASTM test method used.

B. Contractor Provided Mixes. Provide mix design and accompanying JMFs using the methods of verification included in this special provision. Include sufficient information on constituent materials and admixtures along with trial batch verified physical properties of the fresh concrete, mix proportions per cubic yard for all constituents and compressive strength test results necessary to allow the Engineer to

fully evaluate the expected performance of the concrete mixture.

(1) Mix Documentation. Prepare mix designs for each grade of concrete required on the project. Submit JMF for each mix design, including all required documentation, to the Engineer for review 10 working days before the anticipated date of placement. The Engineer will notify the Contractor of any objections within 5 working days of receipt of the mix documentation. Number or otherwise identify each JMF and reference all accompanying documentation to this identification. Reference each JMF to the appropriate method of verification. Mix design and JMF submittals that do not include all required documentation will be considered incomplete and the Engineer will return them without review.

Mix documentation is valid for 2 years provided the material characteristics have not deviated beyond the requirements specified in the contract.

All mix designs and accompanying JMFs must be traceable to a laboratory meeting the requirements of this special provision.

Submit mix design and JMF on the MDOT Job Mix Formula (JMF) Concrete Field Communication form (MDOT Form Number 1976); include accompanying documentation. List the source of materials, bulk density (unit weight) of coarse aggregate (rodding procedure or shoveling procedure), absorption of aggregates, relative density (specific gravity) of aggregates, aggregate correction factors, batch weights, and project specific or historical laboratory test data. Include the recorded air content of fresh concrete using the same admixture and cementitious material sources to be used in the production of the concrete for the project. A JMF will be approved only if all of the minimum mix design requirements specified in the contract have been met.

(2) Job Mix Formula (JMF). Select proportions for concrete mixtures according to *ACI Standard 211.1*. The volume (oven-dry-rodded) of coarse aggregate per unit volume of concrete must be 65 percent, minimum.

Four methods of verification of proposed JMF are acceptable.

(a) Method 1. Trial Batches. Verification of JMF is based on trial batches with the same materials and proportions proposed for use on the project. Prepare at least one trial batch for each mix design in sufficient time before starting concrete placement to allow for review according to subsection c.5.B.(1) of this special provision. Provide the results of temperature, slump, density (unit weight), air content of fresh concrete, 28-day compressive strength, and age of concrete at the time of strength testing, for a minimum of three independent samples. All samples may be taken from a single trial batch for a mix design provided the trial batch is at least four cubic yards in volume. For JMF trial batch verification purposes only, 7-day compressive strength test results which report at least 70 percent of the specified 28-day lower specification limit (LSL) will be sufficient documentation in lieu of 28-day compressive strengths. The average of at least two strength test specimens represents one compressive strength sample test result for each independent sample. Provide the necessary ASR documentation as described in subsection c.5.A of this special provision.

(b) Method 2. Same Mix. Verification of JMF is based on the concrete producer's experience with the same mix design, JMF, and the same materials. Provide the results of temperature, slump, density (unit weight), air content of fresh concrete, 28-day compressive strength, and age of concrete at the time of strength testing, for a minimum of three independent samples. The average of at least two strength test specimens represents one compressive strength sample test result for each independent sample. Do not substitute material types or sources, including admixtures or cementitious materials, nor change mix proportions in the JMF. Provide the necessary ASR documentation as described in subsection c.5.A of this special provision.

(c) Method 3. Similar Mix. Verification of JMF is based on requirements described in Method 2, in subsection c.5.B.(2).(b) of this special provision. Substitution of coarse aggregate source is permitted if the new source is of the same geologic type as the original aggregate, and conforms to the specification requirements for the application. Substitution of fine aggregate is permitted only if the new source has been tested for ASR. Provide the necessary ASR documentation as described in subsection c.5.A of this special provision.

Provide the supporting laboratory trial batch documentation and accompanying calculations showing how the mix proportions in the JMF were adjusted, based on the documented differences in relative density (specific gravity), bulk density (unit weight) and absorption of the substituted aggregate sources, to produce a theoretical yield of 100 percent and the required fresh concrete properties.

(d) Method 4. Annual Verification. At the Engineer's option, verification may be accepted annually for a concrete producer rather than on a project basis provided the sources and proportions of the constituent materials, including cementitious materials and source and types admixtures, do not change. If the project is the continuation of work in progress during the previous construction season and written certification is submitted to the Engineer that materials from the same source and with the same mixture properties are to be used, the Engineer may waive the requirement for annual renewal verification of the JMF for the project. Provide the necessary ASR documentation as described in subsection c.5.A of this special provision.

C. Department Provided Mixes. Unless otherwise specified in the contract or approved by the Engineer, the Engineer will provide the concrete JMF for the following types of concrete regardless of the total quantity for the project.

(1) Structural concrete patching mixtures, mortar and grout.

(2) Bridge deck overlay concrete mixtures.

(3) Project-specific concrete mixtures and grades not defined in Table 1.

Provide all other mix designs and accompanying JMF's according to subsection c.5.B of this special provision.

The ASR documentation for the fine aggregate described in subsection c.5.A of this special provision must accompany the Contractor's request for the concrete JMF.

D. Changes in Materials and Proportions. Any changing from one approved JMF to another for the same grade of concrete must have prior approval by the Engineer.

Prior to batching, verify that the proposed JMF changes will not affect the properties of the fresh concrete (slump, temperature, air content, density (unit weight), workability), nor result in deleterious mortar bar expansion as a result of ASR, as described in subsection c.5.A of this special provision.

Record all changes to JMF in the QC records along with the rationale for the change.

E. QC Sampling and Testing. Conduct startup sampling and testing for temperature, slump, density (unit weight), and air content on the first load. Do not place concrete until testing verifies that the fresh concrete properties have not exceeded the QC action and suspension limit thresholds specified in Table 2 and the testing correlation requirements of subsection d.1.B of this special provision have been met. Continue testing subsequent loads as described in the QC plan, for each grade of concrete delivered to the work site each day. The QC sampling and testing must be random and independent from the Agencies QA sampling and testing.

Provide the curing facilities in accordance with subsection d.2.C of this special provision prior to start of concrete production.

Perform QC sampling and testing for air content of fresh concrete that is either slipformed or pumped, as described in the QC plan. Sample and test a representative haul unit of concrete immediately after its discharge but before the slipform paver or pump hopper, where applicable. Sample and test the concrete representing the same haul unit, again, after the slipform paver or after discharge from the pump (without interruption or alteration of the pumping operation), where applicable. If the difference in measured air content between the two test locations for the same concrete is greater than 1.5 percent air by volume of concrete, suspend operations and administer corrective action. Resume concrete placement only after taking the necessary corrective action to reduce the loss in air content of fresh concrete between the two test locations, as approved by the Engineer. Document the corrective action to be taken in the QC records and make the necessary changes to the QC plan, where applicable.

Concrete exceeding the maximum specification limits for slump or temperature must be rejected regardless of the total mixing time at the time of arrival to the project.

The Engineer may require the Contractor to administer additional QC sampling and testing if the Engineer determines the Contractor’s current QC sampling and testing methodology is shown to be insufficient to ensure continual control of the quality of the concrete.

Take the appropriate corrective action, as described in the QC plan, when QC testing shows the QC action limits for any quality characteristic are exceeded. Suspend production if any of the QC suspension limits are exceeded or if the corrective action is not sufficient to restore the quality to acceptable levels.

Resume production only after making all necessary adjustments to bring the mixture into conformance with all applicable specifications and receiving approval to resume work

from the Engineer. Document these adjustments in the QC records.

Table 2: QC Action and Suspension Limits

Quality Characteristic	Action Limits	Suspension Limits
Air Content (percent)	See Note Below	< 5.0 or > 9.0
Air Content Loss (percent)	As Defined in the Contractor QC plan	Greater than 1.5
Conc. Temp. (Deg. F)		< 45 or > 90 at time of placement
Slump (max.) (inch)		See Table 1, footnote (g)
Density (unit weight)		N/A
Note: Action limits must be defined in the Contractor QC plan and cannot be < 5.5 or > 8.5. Suspend work if air content is < 5.0 or > 9.0 percent after pump or paver, regardless of the air content loss.		

F. Work Progress Test Specimens. Determine the strength of concrete for opening to construction traffic or regular traffic, for removing shoring and forms, or for similar purposes in accordance with subsections 104.11, 601.03.H and 701.03.D of the Standard Specifications for Construction, and as approved by the Engineer. Cure work progress test specimens in the same manner as the in-situ concrete. Allow the Engineer to witness testing of work progress test specimens.

The maturity method may be used to determine the in-place, opening-to-traffic flexural strength, provided the necessary preliminary flexural strength versus time-temperature factor correlation, using the same materials and JMF, is established according to Department procedures and approved by the Engineer before placing the concrete.

G. Reduced QC for Small Incidental Quantities. If approved by the Engineer, reduced levels of on-site QC testing for concrete may be considered for small incidental quantities defined in subsection a.1 of this special provision.

Unless approved by the Engineer, multiple small incidental quantities, including ones that are consecutively placed throughout the project on the same day, are not eligible for reduced QC consideration if the total plan quantity of concrete for the item exceeds 100 cubic yards in volume. Include details for reduced QC testing and oversight in the approved QC plan, and in accordance with following:

(1) The small incidental quantity of concrete will be limited to a single day's concrete placement of a maximum 20 cubic yards in volume.

(2) The small incidental quantity of concrete is not an integral part of a structural load bearing element.

(3) The Engineer received written certification from the Contractor that the concrete supplier has a current QC plan in place and available for review upon request by the Engineer.

(4) The concrete supplier employs a certified concrete technician (MCA Michigan Level II) available at the plant or on call during concrete placement to validate and authorize modifications to the concrete JMF, as necessary.

(5) Prior to the first concreting operation, concrete representing the JMF for the small incidental quantity has been sampled and tested by a certified concrete technician (MCA Michigan Level I or II) to verify that, historically, the JMF produced a

concrete mixture meeting the minimum requirements for density (unit weight), slump, air content, and strength. Annual verification may be acceptable provided there are no changes to the material types or sources, including the cementitious materials and admixtures.

(6) The Engineer verified that the temperature, slump, and air content conform to specification requirements at the start of the day's concreting operation associated with the small incidental quantity.

(7) The Engineer is notified and provided sufficient opportunity to witness concrete placement.

d. Department Administered Quality Assurance (Acceptance).

1. Department Quality Assurance Plan (QA plan). The Engineer will be responsible for administering the quality-based acceptance and will institute any actions necessary toward its successful implementation.

Acceptance of concrete pavement repair mixtures and concrete mixtures not included in Table 1 will be in accordance with the contract.

The Engineer will develop and follow a QA plan. The Engineer will provide the QA plan to the QC Plan Administrator a minimum of 5 working days prior to the pre-production meeting. The QA plan will be reviewed at the pre-production meeting and any proposed changes will be documented.

The nominal QA strength test specimen size, defined in subsection a.1 of this special provision will be noted in the QA plan.

A. Personnel Requirements. The personnel responsible for field inspection and for obtaining QA samples will possess the required qualifications to collect QA samples. Sampling will be performed by a certified concrete technician (MCA Michigan Level I or II) or (MCAT) certified aggregate technician, where applicable.

B. Testing Correlation. Prior to initial concrete placement, the testing personnel for both the Engineer's QA and Contractor's QC will use the equipment they have assigned to the project to conduct side by side correlation testing of the same concrete used on the project to verify correlation of both the Department's and the Contractor's test results for temperature and air content of fresh concrete. Additional side by side correlation testing will be conducted whenever there is a change in QC or QA equipment and/or testing personnel for the project, or as directed by the Engineer. The temperature measuring devices used for QC and QA must correlate with each other within 2 degrees F. If the air content results of the side by side tests conducted by the QC and QA testers and equipment differ by more than 0.8 percent air by volume of concrete, a referee air content test of fresh concrete must be conducted by a third party, designated by the Engineer but independent of the project, prior to commencement or continuation of concrete placement in efforts to resolve issues associated with non-correlation.

C. Laboratory Facilities. The testing laboratory with responsibility for acceptance testing on this project is the Department testing laboratory, or a qualified facility under the authority of the Engineer.

2. QA Sampling and Testing. The Engineer will verify the Contractor's daily startup sampling and testing of temperature, slump, and air content of fresh concrete on the first load; conduct QA sampling and testing; monitor Contractor adherence to the QC plan; and inspect field placed materials in such a manner as to ensure that all concrete for the project is represented. The testing correlation requirements of subsection d.1.B of this special provision must be met prior to concrete placement.

The following *ASTM* test methods will apply. The Department's established procedures for sampling and testing are acceptable alternatives.

C 31 Practice for Making and Curing Concrete Test Specimens in the Field

C 39 Test Method for Compressive Strength of Cylindrical Concrete Specimens

C 78 Test Method for Flexural Strength of Concrete (Using Simple Beam with Third-Point Loading)

C 138 Test Method for Density (Unit Weight), Yield and Air Content (Gravimetric) of Concrete

C 143 Test Method for Slump of Hydraulic-Cement Concrete

C 172 Practice for Sampling Freshly Mixed Concrete

C 173 Test Method for Air Content of Freshly Mixed Concrete by the Volumetric Method

C 231 Test Method for Air Content of Freshly Mixed Concrete by the Pressure Method

C 293 Test Method for Flexural Strength of Concrete (Using Simple Beam with Center-Point Loading)

A. Lot Size and Make Up. A production lot will not include more than one grade of concrete, concrete of the same grade having different specified slump or air content, or concrete of the same grade having different mix designs, or JMFs. Lot size and makeup will be determined by the Engineer, based on site conditions. A production lot may consist of a single day's production, individual concrete structural elements (eg. footing, column, pier cap, deck, bridge approach slab), or any combination thereof, provided they are of the same JMF. Each production lot will be divided into sublots of approximately equal size, as determined by the Engineer. The minimum number of sublots will be one per production lot, with the maximum number of sublots based on the anticipated total quantity of concrete to be placed and site conditions. A minimum of one sublot will be required for each day of production.

B. Sampling. QA sampling and testing will be conducted by the Engineer during concrete placement. Where practical, the random number method (as described in the "Random Sampling for Quality Control/Quality Assurance Projects" section of the Materials Quality Assurance Procedures Manual) will be used to determine the sampling locations. The sampling rate will be determined by the Engineer, based on the anticipated total quantity of concrete to be placed and site conditions, with a minimum of one sampling for each day of production.

At the option of the Engineer, small incidental quantities as defined in subsection a.1 of this special provision may be accepted (visually inspected and noted on the Inspector's Daily Report) without daily 28-day compressive strength QA test specimens provided there is a current acceptable strength test history of the JMF for the project prior to placement of the small incidental quantity. One set of compressive strength QA test specimens will then be molded for each small incidental quantity JMF at least once per week during production, thereafter, as determined by the Engineer (note the test results or identification number for the corresponding weekly QA compressive strength test result on the Inspector's Daily Report for each small incidental quantity). Quality control testing and daily QA testing for temperature, slump, and air content of fresh concrete are still required. Reduced QC for small incidental quantities, as described in subsection c.5.G of this special provision, may be considered.

The QA sampling rate and sample location will be based on cubic yard quantities.

Samples for acceptance will be taken at the point of discharge from the haul unit, at approximately the middle one-third of the load. Mix adjustments to the concrete contained within the haul unit selected for QA sampling and testing (beyond normal QC) will not be permitted prior to QA sampling and testing. QA sampling will be random and without prior notification.

The Engineer will perform QA sampling and testing for air content loss of fresh concrete that is either slipformed or pumped, (1) at least once during each day of production, (2) whenever the concrete pump is relocated, where applicable, or (3) whenever there is a significant change in the boom configuration or operation of the concrete pump, or there is a significant change in the characteristics of the paving operation during concrete placement. Concrete will be sampled from a representative haul unit immediately after its discharge but before the slipform paver or pump hopper, where applicable. The concrete representing the same haul unit will then be sampled and tested after the slipform paver or after discharge from the pump (without interruption or alteration of the pumping operation), where applicable. If the difference in measured air content between the two test locations for the same concrete is greater than 1.5 percent air by volume of concrete, the Engineer will issue a Notice of Non-Compliance with Contract Requirements (Form 1165), as described in subsection d.2.D of this special provision. The Contractor may resume concrete placement only after the necessary corrective action is taken to reduce the loss in air content of fresh concrete between the two test locations, as approved by the Engineer. Document the corrective action that was taken by the Contractor.

C. Testing. The location(s) within the project limits for QA testing of the fresh concrete and placement of curing facilities for initial curing of the 28-day compressive strength QA test cylinders will be determined by the Engineer in conformance with the following criteria:

(1) The elapsed time between obtaining the first and the final portion of the composite sample must not exceed 15 minutes.

(2) Testing for slump, temperature, and air content of fresh concrete must begin within 5 minutes after obtaining the final portion of the composite sample.

(3) Molding of the 28-day compressive strength QA test cylinders must begin within 15 minutes after obtaining the final portion of the composite sample.

(4) The concrete sample must be protected from the sun, wind, and other sources of rapid evaporation, and from contamination.

Two QA concrete strength test specimens per sample will be molded for 28-day compressive strength QA testing.

The Contractor will provide curing facilities equipped to ensure the proper environment for the Agencies QA concrete strength test specimens during initial cure. Each initial cure facility must provide ventilation or insulation, where applicable, to ensure the ambient temperature surrounding the specimens is maintained according to *AASHTO T23/ASTM C 31*. Failure by the Contractor to maintain the proper curing environment during initial cure will not be basis for rejection of samples or claims against the Department. Each initial curing facility must be capable of being locked, using an Department provided padlock. The Contractor will ensure that all initial curing facilities are accounted for at all time, and protected against theft and damage. The Contractor will place and secure each initial cure facility throughout the project limits in such a manner so as to minimize excessive transport of the test specimens prior to initial cure, as follows:

(5) Immediately after finishing molded specimens, the Engineer will move the QA concrete strength test specimens to the closest initial cure facility provided by the Contractor.

(6) Immediately after all QA concrete strength test specimens are placed into the cure facility and the proper initial curing conditions have been established, the Engineer will secure the facility using the Department provided padlock. Access to the QA concrete strength test specimens, thereafter, must be coordinated with the Engineer and will only be permitted in the presence of the Engineer.

(7) The Engineer will transport the QA concrete strength test specimens within 48 hours after molding, but not prior to 8 hours after final set of the concrete, from the initial curing facility to the Department's designated testing laboratory for final curing and strength testing. The specimens will be protected with a suitable cushioning material to prevent damage from jarring during transport. The total transportation time must not exceed 4 hours prior to commencement of final curing.

D. QA Stop Production Criteria. The Engineer will issue a Notice of Non-Compliance with Contract Requirements (Form 1165) and concrete production must stop when one or more of the following are observed.

(1) The QA testing shows that one or more of the suspension limits for quality characteristics defined in Table 2 are in non-compliance.

(2) The QC plan is not being followed.

(3) Segregation, excessive slumping of unsupported slipformed edges, or other notable changes in the fresh concrete properties is observed that may prevent proper placement, consolidation and finishing, or compromise the performance or long-term durability of the finished product.

(4) The required curing system is not being applied in a timely manner, as specified by the contract.

(5) If the measured air content loss between the two testing locations for the same concrete is greater than 1.5 percent air by volume of concrete as described in subsections c.5.E and d.2.B of this special provision.

(6) If the air content of fresh concrete is less than 5.0 or greater than 9.0 percent after pump or paver, regardless of the recorded QC or QA air content loss through the pump or paver.

The Engineer will issue a Notice to Resume Work (Form 1165) only after all necessary adjustments are made to restore conformance with all applicable specifications, and the appropriate documentation is made in the QC records.

E. QA Records. The Engineer will maintain a complete record of all QA tests and inspections. The records will contain, as a minimum, signed originals of all QA test results and raw data, random numbers used (where applicable) and resulting calculations. The QA test results will not be provided to the Contractor until the corresponding QC test results are received by the Engineer.

3. Quality Index Analysis. The Engineer's QA test results will be used to determine the pay factor (PF) and price adjustment (ADJ). The Contractor's QC test results will not be used for pay factor and price adjustment analysis. The Engineer will complete pay factor and price adjustment analysis within 7 working days after completion of all 28-day compressive strength testing for the representative production lot or quantity of concrete. The quality index parameter specification limits are defined in Table 3. Unless otherwise specified in the contract, concrete not conforming to the requirements specified in Table 3 is rejectable and subject to further evaluation. All values of PF and OLPF in these formulae are decimal, not percent. All values of PF and OLPF are rounded to two decimal places.

Price adjustment for 28-day compressive strength deficiencies will be based on test results for the corresponding weekly QA test specimens and the pay factor (PFs) calculated according to the formula defined in subsection d.3.A. The price adjustment (ADJ) = (PFs – 1)(Price).

Table 3: Quality Index Parameter Specification Limits

Quality Characteristic	Specification Limits
Air Content of Fresh Concrete (percent)	5.5 – 8.5
Rejection Limit (percent)	<5.0 or >9.0
Conc. Temp. (deg. F)	45 - 90 at time of placement
Slump (max.) (inch)	See Table 1, footnote (g)
28-day Compressive Strength (psi)	For LSL see Table 1
Rejection Limit - 28-day Compressive Strength	See Table 1

A. Pay Factor for 28-Day Compressive Strength (PFs).

$$PFs = \frac{\text{Tested Strength}}{\text{LSL}}$$

Where:

PFs = Pay Factor for 28-day compressive strength (not to exceed 1.00)

Tested Strength = QA 28-day compressive strength sample test result

LSL = Lower specification limit (see Table 1)

If the tested strength does not meet the rejection limit specified in Table 1, the Engineer will require additional evaluation as described in subsection d.4 of this special provision.

B. Pay Factor for Air Content of Fresh Concrete (PFac). The pay factor for air content of fresh concrete (PFac) will be according to Table 4.

Table 4: Air Content of Fresh Concrete Pay Factor (PFac)

Air Content of Fresh Concrete (percent)	Pay Factor (PFac)
5.5 – 8.5	1.00
5.0 – 5.4	0.50
Below 5.0	Rejection
8.6 – 9.0	0.75
Above 9.0	Rejection

If the air content of fresh concrete is below 5.0 or above 9.0 percent, the Engineer will elect to do one of the following.

(1) Require removal and replacement of the entire quantity of concrete represented by the test with new testing conducted on the replacement concrete and repeat the evaluation procedure.

(2) Allow submittal of a corrective action plan for the Engineer's approval. If the Engineer does not approve the plan for corrective action, subsection d.3.B.(1) of this special provision will be applied. All costs associated with plan submittal and corrective action under this subsection will be borne by the Contractor.

C. Overall Lot Pay Factor (OLPF). The following formulae are used to calculate the OLPF and ADJ. The OLPF will not exceed 1.00.

$$OLPF = (0.60 \times PFs) + (0.40 \times PFac)$$

$$ADJ = (OLPF - 1)(Price)$$

ADJ = Price adjustment per pay unit to be applied to the quantity represented by the QA test

Price = Base price established for the pay item

4. Evaluation of Rejectable Concrete. The Engineer will require additional evaluation to decide what further action may be warranted, as described below. Acceptance for air content of fresh concrete will be based on QA test results reported at the time of concrete placement.

If the Engineer determines that non-destructive testing (NDT) is appropriate, this work will be

done by the Contractor in the presence of the Engineer within 45 calendar days from concrete placement. All costs associated with this work will be borne by the Contractor. A complete set of non-destructive tests must be conducted (in accordance with the respective standard test method) at a minimum three randomly selected locations. If NDT is used to estimate the in-situ strength, a calibrated relationship between the project JMF under evaluation and the NDT apparatus must have been established prior to NDT testing according to its respective standard test method.

If the 28-day compressive strength QA test results show that the rejection limit (as specified in Table 1) has not been achieved, the quantity of concrete under evaluation will be rejected and the Engineer will require additional evaluation to decide what further action may be warranted.

Propose an evaluation plan and submit it to the Engineer for approval before proceeding. The results from NDT will be used only to decide what further action is required. This determination will be made by the Engineer, as follows:

A. For non-structural concrete. If no test result from non-destructive testing falls below the lower specification (LSL) 28-day compressive strength, the represented quantity of concrete under evaluation will remain in place and a pay factor for 28-day compressive strength (PFs) of 1.00 will be applied for overall lot pay factor (OLPF) and price adjustment (ADJ) determinations according to subsection d.3 of this special provision.

B. For structural concrete (including overhead sign foundations). If no test result from non-destructive testing falls below the lower specification limit 28-day compressive strength, the represented quantity of concrete under evaluation will remain in place and a pay factor for 28-day compressive strength (PFs) of 0.85 will be applied for overall lot pay factor (OLPF) and price adjustment (ADJ) determinations according to subsection d.3 of this special provision.

C. If one or more of the non-destructive test results fall below the lower specification limit (LSL) 28-day compressive strength, the Engineer may elect to do one of the following:

(1) Require removal and replacement of the entire rejected quantity of concrete, including new initial tests for pay factor (PF) determination and price adjustment conducted according to subsection d.3 of this special provision.

(2) Allow the Contractor to submit a plan for corrective action, for the Engineer's approval, to address the disposition of the rejected concrete. If the Engineer does not approve the plan for corrective action, subsection d.4.C.(1) of this special provision will be applied. All costs associated with plan submittal and corrective action under this subsection will be borne by the Contractor.

(3) Allow the in-situ quantity of concrete under evaluation to remain in place and a pay factor (PFs) of 0.50 will be applied for overall lot pay factor (OLPF) and price adjustment (ADJ) determinations according to subsection d.3 of this special provision.

e. Measurement and Payment. If a price adjustment is made for reasons included in this special provision, that adjustment will be made using the base price established for the specific item. If a contract unit price requires adjustment for other reasons not described in this special provision, the adjustments will be made using the unit price and the adjustments will be

cumulative.

Separate payment will not be made for providing, implementing, and maintaining an effective QC program. All costs associated with this work will be included in the applicable unit prices for the concrete items. Failure by the Contractor to maintain the proper curing environment during initial cure will not be basis for claim against the Department.

All costs associated with providing, locating, relocating, maintaining, and securing the adequate number of portable initial curing facilities for both the QC and QA strength test specimens will be included in the applicable unit prices for the concrete items. No additional payment will be permitted. The Contractor is responsible for damage, theft, subsequent replacement, and removal after completion of the work for each curing facility used on the project.

MICHIGAN
DEPARTMENT OF TRANSPORTATION

SPECIAL PROVISION
FOR
CONCRETE CURB, AND GUTTER, WITH BASALT FIBER REINFORCED POLYMER, DETAIL __

STR:POJ 1 of 3 APPR:JAB:JFS:05-28-20
FHWA:APPR:06-02-20

a. Description. This work consists of constructing concrete curb, gutter, and dividers, using basalt fiber reinforced polymer (BFRP) reinforcement at the Contractors option, in accordance with section 802 of the Standard Specifications for Construction, and as modified on the plans and this special provision. At the Contractors option the number 3 size BFRP may be substituted for longitudinal epoxy coated number 4 steel reinforcement shown on Standard Plans R-27 Series, R-30 Series, and R-33 Series. Do not use BFRP for lane ties.

b. Materials. Provide materials in accordance with subsection 802.02 of the Standard Specifications for Construction except as modified by this special provision. Furnish BFRP reinforcement that meet the following material specifications and requirements. Provide BFRP reinforcement in accordance with the details shown on the plans.

1. Fibers. Use fibers in the form of unidirectional rovings of given size and weight with fiber sizing and coupling agents that are compatible with the resin system used to impregnate them. The BFRP reinforcement must contain 70 percent, minimum, by weight of basalt fiber.

2. Resin Matrix. Use commercial grades of epoxy, polyurethanes, or vinyl ester resins. Ensure the base polymer in the resin system does not contain any polyester. Blending of vinyl ester and epoxy resins is permitted. Ensure the glass transition temperature (Tg) of the resin is not less than 212 degrees Fahrenheit in accordance with the Differential Scanning Calorimetry (DSC) method described in *ASTM E 1356*, *Standard Test Method for Assignment of the Glass Transition Temperatures by Differential Scanning Calorimetry.*

3. Fillers. Inorganic fillers and secondary fibers may be used, but their quantity must not exceed 20 percent by weight of the base polymer resin specified. Commercial grade additives and process aids such as release agents, low profile shrink additives, initiators, promoters, hardeners, catalysts, pigments, fire-retardants, and ultraviolet inhibitors are permitted and depend on the process method. If used, limit shrink additives to less than 20 percent by weight of the polymer resin.

4. Mechanical Properties. Furnish BFRP with the following minimum requirements:

A. Tensile Strength. The minimum tensile strength of BFRP reinforcement is shown in Table 1. Test in accordance with *ASTM D 7205/D 7205M, Standard Test Method for Tensile Properties of Fiber Reinforced Polymer Matrix Composite Bars*.

Table 1: Minimum Tensile Strength Requirements

Bar Size	Minimum Tensile Strength (ksi)
3	140
4	135
5	130
6	125
7	120
8	110

B. Tensile Modulus. Ensure the nominal tensile modulus of elasticity averages 6,000 kips per square inch (ksi) in accordance with *ASTM D 7205/D 7205M*.

C. Transverse Shear. Ensure the minimum transverse shear strength is not less than 20 ksi, as tested in accordance with *ASTM D 7617/D 7617M, Standard Test Method for Transverse Shear Strength of Fiber-Reinforced Polymer Matrix Composite Bars*.

D. Moisture Absorption. Test moisture absorption in accordance with *ASTM D 570, Standard test Method for Water Absorption of Plastic*. The maximum value of this test must follow ACI recommendations and be less than 1.0 percent.

E. Bond Strength. The bond strength for all bars must follow ACI recommendations of *ACI 440.6-08*, 1.4 ksi. The manufacturer must report the test method used for testing bond strength. Follow *ACI 440.3R test method B3* or a method approved by the Engineer

F. Ultimate Tensile Strain. Ensure the ultimate tensile strain is at least 1.4 percent.

G. Provide BFRP as manufactured by:

(1) Neuvokas Corp., *GatorBar*, 3206 Number 6 Road, PO Box 220, Ahmeek, MI 49901, Ph. (906) 934-2661,

(2) Raw Energy Materials Corp., 1190 South Dixie Hwy Southeast, Pompano Beach, FL 33060, Ph: 954-803-9206, Alt: 954-270-9000,

(3) Approved equal.

c. Acceptance. Provide the Engineer a General Certification from the BFRP reinforcement manufacturer stating the materials furnished meet the specifications as described herein.

The Department will take three 4 foot in length quality assurance samples for informational purposes, of each size BFRP bar at the beginning of each project.

d. Construction. Construct the concrete curb and gutter in accordance with the standard specifications, except as modified by the details on the plans and this special provision. Ensure BFRP reinforcement bars are uniform in diameter/size and free of defects. Defects include exposed fibers, cracks, kinks, and surface pitting. Slight discoloration is not cause for rejection.

1. Field Fabrication. Provide BFRP reinforcement in accordance with the details shown on the plans. Field fabrication, except for tying and cutting, and gradual bending in

accordance with manufacturer's recommendations, of BFRP reinforcing bars is prohibited. The minimum bending radius for BFRP is two feet and must utilize the necessary tying and stabilization methods to ensure the BFRP remains in the proper position before and during concrete placement. Field cut BFRP reinforcement using high speed grinding cutter, fine blade saw, diamond blade, or masonry blade. Ensure all surface damage due to cutting is repaired or replaced as directed by the Engineer, at the Contractors expense.

2. Handling. BFRP bars can be handled similar to their steel counterparts. Minor scratches and chipping that do not impact performance may be permitted with approval of the Engineer.

3. Storage of BFRP Reinforcement. Store reinforcement above the surface of the ground on platforms, skids, pallets, or other supports. Cover the BFRP bars with a tarp or other protective cover if it is anticipated that the BFRP bars will be stored outdoors for more than 2 months. Protective cover must eliminate exposure to ultraviolet (UV) light.

4. Placing and Fastening. Place all reinforcement within the tolerances recommended in the CRSI "Manual of Standard Practice" unless otherwise specified in the contract. Secure reinforcement firmly with mechanical fasteners during the placing and setting of the concrete. Suspend concrete placement and take corrective action if it is observed that the BFRP reinforcement is not adequately supported or tied to resist settlement, floating upward, or movement in any direction during concrete placement.

5. Ties and Supports. Ensure all accessories for use with the BFRP bars such as tie wires, bar chairs, supports or clips are either plastic coated steel or plastic. Place all reinforcement in locations as shown on the plans and securely hold in position while placing and consolidating concrete. Fasten bars together with ties at all intersections.

6. Lap Splices. Lap splices are the only approved method to tie bars together to make a continuous bar. Mechanical splices are prohibited. Ensure lap length and spacing is as specified in the contract. Provide the same cover clearances for splices that is shown or specified for the reinforcement.

e. Measurement and Payment. The completed work, as described, will be measured and paid for at the contract unit price using the following pay items:

Pay Item	**Pay Unit**
Curb and Gutter, Conc, with BFRP, Det __	Foot
Valley Gutter, Conc, with BFRP	Foot
Curb and Gutter, Bridge Approach, with BFRP	Foot

Curb and Gutter, Conc, with BFRP, Det __; **Valley Gutter, Conc, with BFRP**; and **Curb and Gutter, Bridge Approach, with BFRP** include the provision of documentation certifications and submittal of informational samples.

MICHIGAN
DEPARTMENT OF TRANSPORTATION

SPECIAL PROVISION
FOR
CURB RAMP OPENING, CONCRETE

DES:CAL 1 of 1 APPR:MB:DBP:04-10-17
APPR FHWA:04-17-17

Add the following new subsection 803.03.I, on page 543 of the Standard Specifications for Construction:

I. **Curb Ramp Opening**. Construct curb ramp openings in accordance with subsection 802.03 of the Standard Specifications for Construction, Standard Plan R-28 Series and as required to conform with the associated sidewalk ramp geometry (counter slope, running slope, cross slope, flares, widths, etc.).

Add the following pay item to the pay item listing in subsection 803.04, on page 544 of the Standard Specifications for Construction:

Curb Ramp Opening, Conc .....Foot

Delete the second paragraph of subsection 803.04.C, on page 544 of the Standard Specifications for Construction in its entirety and replace with the following:

The unit price for **Sidewalk Ramp, Conc, __ inch** includes the cost of landings, monolithic rolled curbs or side flares along the longitudinal edges of the ramp or landing, and transitions to existing sidewalk.

Add the following new subsection 803.04.G, on page 545 of the Standard Specifications for Construction:

G. Curb Ramp Opening, Conc. The Engineer will measure **Curb Ramp Opening, Conc**. in place along the joint of the curbing with the pavement including transitions to and from adjacent standard full height curb and gutter cross section.

CITY OF HANCOCK

SPECIAL PROVISION
FOR
RAILING FOR STEPS

OHM:MJM Page 1 of 1 3/3/21

a. Description. This work shall consist of installing steel handrail as shown on the plans and shall be completed in accordance with Section 803 of the Michigan Department of Transportation (MDOT) 2012 Standard Specifications for Construction and as directed by the Engineer. Contractor shall provide shop drawings based on field measurements prior to ordering materials.

b. Materials. Provide 1-1/2” diameter rail elements and posts constructed of ASTM M-36 steel, galvanized in accordance with ASTM A-123.

c. Construction Methods. All work shall be performed in accordance with the 2012 Michigan Department of Transportation Standard Specifications for Construction and as defined herein. Handrail, Steel fabrication shall be done in accordance with the plan details, conforming to current OHSA standards.

d. Measurement and Payment. The completed work for Railing for Steps will be paid for respectively at the contract unit price as specified in the section 803.04 of the 2012 standard specifications for construction.

MICHIGAN
DEPARTMENT OF TRANSPORTATION

SPECIAL PROVISION
FOR
PERMANENT PAVEMENT MARKINGS

PMK:MKB 1 of 3 APPR:MWB:CRB:02-05-19
FHWA:APPR:02-21-19

Add the following to the end of the list of materials in subsection 811.02, on page 588 of the Standard Specifications for Construction:

Modified Urethane Pavement Marking Material 920
Preformed Thermoplastic Pavement Marking Material 920

Ensure preformed thermoplastic materials for surface applications have a thickness of 90 mils and preformed thermoplastic materials for recessed applications have a thickness of 125 mils.

Add the following paragraph after the first paragraph of subsection 811.03.B, on page 589 of the Standard Specifications for Construction:

If pavement marking plan sheets and/or Witness, Log are included in the project the markings will be laid out by the Contractor prior to the permanent markings being applied. Layout is considered incidental to placement of permanent pavement markings. Provide the Engineer documented notice at least 2 calendar days prior to the Contractor pavement marking crew arriving onsite to layout and place the permanent pavement markings to enable the Engineer or a representative being onsite for review of the layout prior to the marking application. Notify the Engineer if it is discovered during layout that the pavement width or geometry has been altered or is different from the planned or logged configuration. The Contractor and Engineer will discuss and document the resolution for marking layout in such areas. If pavement marking plans and/or Witness, Log are not in the project, it is the responsibility of the Engineer to provide layout for the permanent pavement markings.

Add the following rows to Table 811-1 of subsection 811.03.B, on page 591 of the Standard Specifications for Construction:

Polyurea	20	Binder (gal)	5.5	8.25	11	17	22	33	44	66
		Bead (lb)	As directed by the manufacturer							
Modified Urethane	20	Binder (gal)	5.5	8.25	11	17	22	33	44	66
		Bead (lb)	As directed by the manufacturer							

Add the following paragraph after the fifth paragraph on page 592 of subsection 811.03.B, of the Standard Specifications for Construction:

Beads are not to be placed in liquid shadow markings.

Add the following subsections after the last paragraph of subsection 811.03.D.7.c, on page 595 of the Standard Specifications for Construction:

8. **Modified Urethane.** Ensure the pavement is free of excess surface and subsurface moisture that may affect bonding. The Engineer will not decide the suitability of specific days for the application of modified urethane.

   Surface preparation requirements for special, and longitudinal modified urethane pavement markings depend on surface conditions.

   Prepare new HMA surfaces and HMA surfaces open to traffic for 10 days or less with no oil drips, residue, debris, or temporary or permanent markings, by cleaning the marking area with compressed air.

   Prepare new PCC surfaces and PCC surfaces free of oil drips, residue, and debris, temporary, or permanent markings, by removing the curing compound from the area required for pavement markings.

   Prepare existing HMA or PCC surfaces that do not have existing markings, but may have oil drip areas, debris, or both, by scarifying the marking area using non-milling grinding teeth or shot blasting. The Engineer will allow the use of water blasting to scarify the marking area on PCC surfaces.

   Prepare existing HMA or PCC surfaces with existing pavement markings and that may have oil drip areas, debris, or both, by using the following methods:

   a. For existing liquid pavement markings, scarify the proposed marking area using non-milling grinding teeth or shot blast. Occasionally existing liquid pavement markings will require complete removal, which will be determined by the Engineer.
   b. For existing cold plastic markings, completely remove the existing markings.

9. **Preformed Thermoplastic.** Ensure the pavement is free of excess surface and subsurface moisture that may affect bonding. The Engineer will not decide the suitability of specific days for the application of preformed thermoplastic.

   Heat and apply the preformed thermoplastic material as recommended by the manufacturer. Feather all edges of the material with a putty knife while the preformed thermoplastic is still soft.

Modify the following row in Table 811-2 of subsection 811.03.D, on page 596 of the Standard Specifications for Construction to read as follows:

Thermoplastic	50	50	May 1	Nov. 1

Add the following rows to Table 811-2 of subsection 811.03.D, on page 596 of the Standard Specifications for Construction:

Modified Urethane	40	40	Apr. 15	Nov. 15
Preformed Thermoplastic	35	35	Apr. 15	Nov. 15

Add the following pay items to the list of pay items in subsection 811.04, on page 598 of the Standard Specifications for Construction:

Pavt Mrkg, Modified Urethane, (symbol).....Each
Pavt Mrkg, Modified Urethane, (legend) .....Each
Pavt Mrkg, Modified Urethane, __ inch, Crosswalk.....Foot
Pavt Mrkg, Modified Urethane, __ inch, Stop Bar .....Foot
Pavt Mrkg, Modified Urethane, __ inch, Cross Hatching, (color).....Foot
Pavt Mrkg, Modified Urethane, __ inch, (color).....Foot
Pavt Mrkg, Ovly Cold Plastic, __ inch, Shadow Tape, Black.....Foot
Pavt Mrkg, Ovly Cold Plastic, __ inch, Wet Reflective, (color) .....Foot
Pavt Mrkg, Preformed Thermoplastic, (symbol).....Each
Pavt Mrkg, Preformed Thermoplastic, (route) Route Shield, __ foot by __ foot.....Each
Pavt Mrkg, Preformed Thermoplastic, (legend).....Each
Pavt Mrkg, Preformed Thermoplastic, __ inch, Crosswalk.....Each
Pavt Mrkg, Preformed Thermoplastic, __ inch, Stop Bar .....Foot
Pavt Mrkg, Preformed Thermoplastic, __ inch, Cross Hatching, (color).....Each
Pavt Mrkg, (binder), __ inch, Shadow Liquid, Black.....Foot
Pavt Mrkg, Wet Reflective Waterborne, 2nd Application, __ inch, (color).....Foot

MICHIGAN
DEPARTMENT OF TRANSPORTATION

SPECIAL PROVISION
FOR
FLUORESCENT PLASTIC DRUM

OFS:RAL 1 of 2 APPR:CRB:MWB:06-21-17
FHWA:APPR:07-21-17

a. Description. This work consists of furnishing, installing, maintaining, relocating, and removing a fluorescent plastic drum as identified in the contract.

b. Materials. Provide a fluorescent plastic drum that is crashworthy in accordance with the *National Cooperative Highway Research Program Report 350 (NCHRP 350)* or *Manual for Assessing Safety Hardware* (MASH), in addition to meeting the following requirements:

1. Provide a plastic drum and ballast in accordance with the standard specifications.

2. Equip the drum with reflective sheeting that meets the requirements of *ASTM D 4956* for reboundable Type IV Fluorescent Orange, and reboundable Type IV White. This sheeting must also meet the dimensional and installation requirements of Special Detail WZD-125. The florescent orange sheeting must have a Daytime Luminance factor that meets or exceeds 20 based on *Table 2 of ASTM D 4956 - Daytime Luminance Factor (Y%)*^{A}. The white sheeting must have a Daytime Luminance factor that meets or exceeds 27 based on *Table 2 of ASTM D 4956 - Daytime Luminance Factor (Y%)*^{A}.

A. Use sheeting from one of the following manufacturers or an approved equal:

(1) WR-7100 (white) and WR-7114(fluorescent orange), manufactured by Avery Dennison - Reflective Solutions, 7542 N. Natchez Ave. Niles, IL, 60714, (877)-214-0909.

(2) 3910 (white) and 3914 (fluorescent orange) Diamond Grade Flexible Work Zone Sheeting, manufactured by 3M Traffic Safety & Security Division, 3M Center, 225-4N-14 St. Paul, MN, 55144, (800)-553-1380.

c. Construction. Install the fluorescent plastic drums at locations specified in the contract or as directed by the Engineer.

d. Measurement and Payment. The completed work, as described, will be measured and paid for at the contract unit price using the following pay items:

Pay Item	**Pay Unit**
Plastic Drum, Fluorescent, Furn	Each
Plastic Drum, Fluorescent, Oper	Each

1. **Plastic Drum, Fluorescent, Furn** will be paid for as specified in subsection 812.04.C of the Standard Specifications for Construction.

2. **Plastic Drum, Fluorescent, Oper** will be paid for as specified in subsection 812.04.D of the Standard Specifications for Construction.

MICHIGAN
DEPARTMENT OF TRANSPORTATION

SPECIAL PROVISION
FOR
TRAFFIC CONTROL QUALITY AND COMPLIANCE

OPR:JJG 1 of 2 APPR:CER:DBP:01-20-11
FHWA:APPR:06-20-11

Delete the subsection 812.03.C, Deficient Traffic Control Operations on page 601 of the Standard Specifications for Construction in its entirety, and replace with the following.

C. **Deficient Traffic Control Operations.**

1. **Traffic Control Quality and Compliance.** The following applies to all aspects of the traffic control plan and traffic control devices except the Type D lights on plastic drums which are covered elsewhere in the contract.

a. **Traffic Control not Anticipated in Design.** If at any time during the project, including the time during the seasonal suspension, the Engineer documents that the traffic control requires improvements beyond the scope of the Traffic Control Plan, the Engineer will provide written instructions to the Contractor and traffic control supplier what improvements are required. The Contractor must develop and submit to the Engineer for approval, a written implementation schedule for improvements. If the schedule is not approved, or if the schedule is approved but is not followed, the Department will adjust the contract according to subsection 812.03.C.1.c.iii. If the implementation schedule is not followed, the Engineer will notify the Contractor and traffic control supplier in writing that they are in violation of this subsection. The work of making traffic control improvements directed by the Engineer that are beyond the scope of the Traffic Control Plan will be paid for as extra work.

b. **As Designed Traffic Control.** If at any time during the project, including the time during the seasonal suspension, the Engineer documents that the traffic control is deficient, inadequate or improperly placed, the Engineer will provide written notification with instructions for corrective action to the Contractor and traffic control supplier. Upon receipt of the notification of corrective action, the Contractor has 4 hours to correct the traffic control. If the traffic control cannot be corrected within the 4 hour time period, the Contractor will develop a written implementation schedule for the corrective action and submit the schedule to the Engineer for approval within 1 hour of receiving the written notification. If the schedule is not approved, or if the schedule is approved but is not followed, the Department will adjust the contract according to subsection 812.03.C.1.c.iii. If the implementation schedule is not followed, the Engineer will notify the Contractor and traffic control supplier in writing that they are in violation of this subsection.

c. **Corrective Action.** The Engineer will give written notification to the Contractor as identified above. Failure to make corrections within the timeframe required may result in the following actions by the Engineer:

i. Stop work on the project until the Contractor completes corrective action,
ii. Order corrective action by others in accordance with subsection 107.07, subsection 108.02, subsection 812.03.B, and in the interest of public safety.
iii. A contract price adjustment will be made in the amount of $100 per hour for every hour or portion thereof the improvements or corrective action remains incomplete as described herein. If improvements or corrections have not been made to the satisfaction of the Department, the contract will be adjusted until the traffic control is acceptable.

MICHIGAN
DEPARTMENT OF TRANSPORTATION

SPECIAL PROVISION
FOR
PAYMENT FOR MINOR TRAFFIC DEVICES AND TRAFFIC REGULATOR CONTROL

OPR:JJG 1 of 1 APPR:BJO:DBP:07-19-11
FHWA:APPR:07-19-11

Delete Table 812-1 in subsection 812.04.E, on page 625 of the Standard Specifications for Construction, in its entirety and replace with the following.

Table 812-1 Partial Payment Schedule for Minor Traf Devices and Traffic Regulator Control

Percent of Original Contract Amount Earned	Total Percent of Unit Price Paid
First Use	15
25	30
50	55
75	80
90	100

MICHIGAN
DEPARTMENT OF TRANSPORTATION

SPECIAL PROVISION
FOR
SIGN, TYPE B, TEMPORARY, PRISMATIC, SPECIAL

COS:CRB 1 of 2 APPR:MWB:CGB:04-29-19
FHWA:APPR:05-07-19

a. Description. This work consists of fabricating, placing, maintaining, removing, and/or relocating the Type B, Temporary, Prismatic, Special signs identified in the proposal or on the plans. The signs have non-standard legends and may be project specific.

b. Materials. Use prismatic grade reflective sheeting, as described in section 922 of the Standard Specifications for Construction.

Ensure all temporary signs meet the specifications in subsection 812.03.D.1 of the Standard Specifications for Construction and be approved by the Engineer prior to use.

Route markers or overlays used in the fabrication or modification of Type B, Temporary, Prismatic, Special signs must either be directly applied to the Type B, Temporary, Prismatic, Special sign face or be fabricated utilizing Type III or Type IV substrate as defined in section 919 of the Standard Specifications for Construction. Overlays or route markers fabricated with Type II substrates are prohibited.

c. Construction. The Type B, Temporary, Prismatic, Special signs must meet the requirements for Sign, Type B, Temp, Prismatic, Furn and Sign, Type B, Temp, Prismatic, Oper as outlined in section 812 of the Standard Specifications for Construction.

Ensure Type B, Temporary, Prismatic, Special signs are not fabricated with vertical seams. Horizontal seams are not to cross through the sign legend.

Temporary Type IV substrate sign overlays may be used to modify the legends of Type B, Temporary, Prismatic, Special signs.

Install Type B, Temporary, Prismatic, Special signs on driven sign supports, in accordance with subsections 812.03, 919.04 and section 912 of the Standard Specifications for Construction, unless otherwise indicated on the plans, in the proposal or approved by the Engineer.

d. Measurement and Payment. The completed work, as described, will be measured and paid for at the contract unit price using the following pay items:

Pay Item	**Pay Unit**
Sign, Type B, Temp, Prismatic, Spec, Furn	Square Foot
Sign, Type B, Temp, Prismatic, Spec, Oper	Square Foot

1. **Sign, Type B, Temp, Prismatic, Spec, Furn** will be paid for the same as described for the pay item Sign, Type __, Temp, Prismatic, Furn in subsection 812.04.C of the Standard

Specifications for Construction. In addition, the pay item includes the fabrication of all initial route markers and overlays for the Type B, Temporary, Prismatic, Special signs.

2. **Sign, Type B, Temp, Prismatic, Spec, Oper** will be paid for the same as described for the pay item Sign, Type __, Temp, Prismatic, Oper in subsections 812.04.D and 812.04.B of the Standard Specifications for Construction.

Payment for operated items also includes the removal of all portable or driven sign supports (including post stubs and ballast) used to install the Type B, Temporary, Prismatic, Special signs.

Payment for operated items will also include the installation and/or removal of all overlays used to modify portions of Type B, Temporary, Prismatic, Special signs as specified on the plans, in the proposal or required by the Engineer and includes all equipment and material necessary to install and/or remove the overlays as required for the life of the contract. When sign overlays, including different route markers, are used to modify portions of Type B, Temporary, Prismatic, Special signs, only the overlay will be paid for as additional square footage of **Sign, Type B, Temp, Prismatic, Spec, Furn.**

MICHIGAN
DEPARTMENT OF TRANSPORTATION

SPECIAL PROVISION
FOR
SUPPORTS FOR TEMPORARY SIGNS

OPR:CRB 1 of 1 APPR:MWB:DBP:06-26-12
FHWA:APPR:08-18-12

Delete the last paragraph of subsection 812.03.D.3, on page 604 of the Standard Specifications for Construction in its entirety, and replace with the following.

Mount construction signs on portable sign support standards only if signs are to remain in place for 14 days or less, or as allowed by the Engineer if fixed supports are not possible.

MICHIGAN
DEPARTMENT OF TRANSPORTATION

SPECIAL PROVISION
FOR
MEASUREMENT AND PAYMENT OF TEMPORARY TRAFFIC CONTROL DEVICES

OFS:CRB 1 of 1 APPR:MWB:JJG:02-27-14
FHWA:APPR:03-04-14

Delete subsection 812.04.A.4, on page 624 of the Standard Specifications for Construction in its entirety.

Delete the second paragraph of subsection 812.04.C, on page 624 of the Standard Specifications for Construction in its entirety, and replace with the following:

The Engineer will measure **Sign, Type __, Temp, Prismatic, Furn** as the total cumulative area of the maximum number of each sign legend that is in use during the course of the project unless previously paid. The unit price for **Sign, Type __, Temp, Prismatic, Furn** includes the cost of portable or driven sign supports.

Delete the second paragraph of subsection 812.04.D, on page 624 of the Standard Specifications for Construction in its entirety, and replace with the following:

The Engineer will measure **Sign, Type __, Temp, Prismatic, Oper** as the total cumulative area of the maximum number of each sign legend that is in use during the course of the project unless previously paid.

MICHIGAN
DEPARTMENT OF TRANSPORTATION

SPECIAL PROVISION
FOR
TYPE III BARRICADES

DES:DBP 1 of 1 APPR:MWB:CRB:08-07-15
FHWA:APPR:08-23-15

Delete the first sentence for the second paragraph in subsection 812.03.D.8 on page 606 of the Standard Specifications for Construction, and replace with the following:

Light Type III barricades with two, Type C or Type D warning lights, fastened to the uprights above the top rail, provided these warning lights each weigh 3.3 pounds or less.

Delete the following pay items from the list in subsection 812.04 on page 622 of the Standard Specifications for Construction.

Barricade, Type III, High Intensity, Furn.....Each
Barricade, Type III, High Intensity, Oper.....Each
Barricade, Type III, High Intensity, Double Sided, Furn .....Each
Barricade, Type III, High Intensity, Double Sided, Oper.....Each

Renumber the existing subsection 812.04.A.5 on page 624 of the Standard Specifications for Construction, as follows:

4. The manufacturer's invoiced cost for damaged equipment included in a lump sum pay item for maintaining traffic.

MICHIGAN
DEPARTMENT OF TRANSPORTATION

SPECIAL PROVISION
FOR
PAYMENT OF TEMPORARY TRAFFIC CONTROL DEVICES

OFS:CRB 1 of 1 APPR:CGB:MB:08-26-16
FHWA:APPR:09-13-16

Delete subsection 812.04.A Damage Compensation, on page 623 of the Standard Specifications for Construction, in its entirety and replace with the following:

A. Damage Compensation. Notify the Engineer of damaged temporary traffic control devices. Before replacement and disposal, allow the Engineer to verify the condition of damaged temporary traffic control devices eligible for payment. Damage will be assumed to have occurred from vehicular traffic unless otherwise documented. The Department will pay as follows, for replacing temporary traffic control devices or equipment that are placed appropriately and damaged by vehicular traffic, other than the Contractor's vehicles and equipment.. Devices will be assumed to be placed appropriately unless otherwise documented. Replacement will be made up to project completion (excluding water and cultivating), as follows:

1. The **Furnished** unit price for temporary traffic control devices paid for as furnished pay items, excluding Plastic Drums and 42 inch channelizing devices;
2. The unit price for devices not paid for as **Furnished**;

    a. Plastic Drums and 42 inch Channelizing Devices will be paid for at a set rate of $35 per Plastic Drum and $18 per damaged 42 inch Channelizer.

        i. Prior to payment the Plastic Drum or 42 inch Channeling Device must be classified as unacceptable, per the ATSSA Quality Guidelines for Temporary Traffic Control Devices and Features (ATSSA QG), and spray-painted with an X.
        ii. All Plastic Drums and 42 inch Channelizing Devices that are classified as marginal, per the ATSSA QG, during the project, will have blue survey ribbon tied to the handle. MDOT will be responsible for marking marginal devices. Removal and replacement will take place as defined under the Quality Classifications and Requirements Section of the ATSSA QG and will be at no additional cost to the Department.

            • If at any time, any Contactor, is witnessed tampering with the marginal marking method, the Engineer may require all marginal devices on the project to be upgraded to acceptable outside the timeframes detailed in the ATSSA QG.

3. The manufacturer's invoice cost for devices required by the Engineer and not included in the unit price for other relevant pay items;
4. The manufacturer’s invoiced cost for damaged equipment included in a lump sum pay item for maintaining traffic.

CITY OF HANCOCK

SPECIAL PROVISION
FOR
EXISTING RIPRAP, REMOVE & SALVAGE

OHM:MJM 1 of 1 02-04-2020

a. Description. This work consists of removing and installing salvaged riprap on geotextile as described in this special provision at the locations shown on the plans, conforming to section 813 of the Standard Specifications for Construction, and as directed by the Engineer.

b. Materials. Use salvaged riprap and place on geotextile liner meeting the requirements of section 910 of the Standard Specifications for Construction.

c. Construction. Remove and stockpile existing riprap to be salvaged. Place salvaged riprap in accordance with subsection 813.03.E of the Standard Specifications for Construction, on prepared grades as shown on the plans. Once existing riprap is removed, clear areas to be protected by riprap of brush, trees, stumps, debris and surplus or unsuitable soil. Shape and compact all grades to the required cross section, including excavation for toe and header details. Place geotextile liner on prepared grades according to the Soil Erosion and Sedimentation Control Manual. Ensure the riprap installation does not damage the geotextile liner. Damaged geotextile liner must be repaired or removed and replaced as directed by the Engineer at no cost to the City.

On slopes, placement of riprap stone must start at the toe and proceed up the slope, with each stone firmly bedded into the slope and against adjoining stones. Construct the riprap to minimize voids by select placement of optimum stone sizes from the gradation specified. If placed riprap contains large voids, the Engineer will direct the Contractor to place additional stones of the appropriate gradation sizes to fill the voids. The finished surface of the riprap must present a tight, even surface.

d. Measurement and Payment. The completed work, as described, will be measured and paid for at the contract unit price using the following pay item:

Pay Item	**Pay Unit**
_Remove Existing Riprap and Salvage	Square Yard

Existing Riprap, Remove & Salvage includes furnishing all materials, equipment and labor to remove, salvage, clear and prepare grades, excavate and dispose of surplus or unsuitable materials, furnish and place geotextile liner as applicable and place the salvaged riprap stone, in accordance with this special provision.

MICHIGAN
DEPARTMENT OF TRANSPORTATION

SPECIAL PROVISION
FOR
SLOPE RESTORATION, NON-FREEWAY

C&T:DMG 1 of 3 C&T:APPR:TWK:DBP:04-25-12

a. Description. This work consists of preparing all lawns and slopes on non-freeway projects designated for slope restoration on the plans or as directed by the Engineer and applying topsoil, fertilizer, seed, mulch with mulch anchor, mulch blanket, high velocity mulch blanket and permanent turf reinforcement mat to those areas. Turf establishment must be in accordance with section 816 of the Standard Specifications for Construction and Standard Plan R-100 Series, except as modified herein or otherwise directed by the Engineer.

b. Materials. The materials and application rates specified in sections 816 and 917 of the Standard Specifications for Construction apply unless modified by this special provision or otherwise directed by the Engineer. The following materials must be used on this project:

1. Seeding mixture as called for on the plans

2. Fertilizer, Chemical Nutrient, Class A

3. Topsoil Surface, Furnished or Salvaged, 4 inch. Remove any stones greater than 1/2 inch in diameter or other debris from all topsoil.

4. Mulch and Mulch Anchoring, Mulch Blanket and High Velocity Mulch Blanket

5. Permanent Turf Reinforcement Mat (TRM) must be 100 percent synthetic and consist of 100 percent ultraviolet (UV) stabilized polyolefin fibers sewn between two layers of black UV stabilized polypropylene netting with polyolefin thread. The TRM must meet the following "minimum average roll value" requirements:

Property	Test Method	Requirement
Mass/Unit Area	ASTM D 6566	10 oz/syd
Ultraviolet Stability @ 1000 hrs	ASTM D 4355	80 percent
Tensile Strength (MD)	ASTM D 6818	165 lbs/ft

Acceptance. Supply a Test Data Certification for the permanent TRM from one of the following manufacturers:

Recyclex - American Excelsior Co., Arlington, TX (800) 777-7645
P300 - North American Green, Poseyville, IN (800) 772-2040
Landlok 450 - Propex, Inc., Chattanooga, TN (800) 621-1273
PP5-10 - Western Excelsior, Mancos, CO (800) 833-8573

c. Construction. Construction methods must be in accordance with subsection 816.03 of the Standard Specifications for Construction. Begin this work as soon as possible after final grading of the areas designated for slope restoration but no later than the maximum time frames stated in

subsection 208.03 of the Standard Specifications for Construction. It may be necessary, as directed by the Engineer, to place materials by hand.

Shape, compact and assure all areas to be seeded are weed free prior to placing topsoil. Place topsoil to the minimum depth indicated above, to meet proposed finished grade. If the area being restored requires more than the minimum depth of topsoil to meet finished grade, this additional depth must be filled using topsoil or, at the Contractor's option, embankment. Furnishing and placing this additional material is included in this item of work.

Topsoil must be weed and weed seed free and friable prior to placing seed. Remove any stones greater than 1/2 inch in diameter or other debris. Apply seed mixture and fertilizer to prepared soil surface. Incorporate seed into top 1/2 inch of topsoil

Apply mulch at a rate of 2 tons per acre. Place Mulch Anchoring over the mulch at a rate specified in subsection 816.03.F of the Standard Specifications for Construction. Mulch Blanket and High Velocity Mulch Blanket must be placed in accordance with subsection 816.03.H of the Standard Specifications for Construction and as shown on Standard Plan R-100 Series.

Areas constructed with the TRM must be installed on prepared (seeded) grades as shown on the plans in strict accordance with the manufacturer's published installation guidelines. The top edge of the TRM must be anchored in a minimum 6 inch deep trench. Operation of equipment on the slope will not be allowed after placement of the TRM. No credit for splices, overlaps, tucks or wasted material will be made.

If an area washes out after this work has been properly completed and approved by the Engineer, make the required corrections to prevent future washouts and replace the topsoil, fertilizer, seed and mulch. This replacement will be paid for as additional work using the applicable contract items.

If an area washes out for reasons attributable to the Contractor's activity or failure to take proper precautions, replacement will be at the Contractor's expense.

The Engineer will inspect the seeded turf to ensure the end product is well established, weed free, in a vigorous growing condition, and contains the species called for in the seeding mixture.

If the seeded turf is not well established at the end of the first growing season, the Contractor is responsible to re-seed until the turf is well established and approved by the Engineer.

If weeds are determined by the Engineer to cover more than 10 percent of the total area of slope restoration, the Contractor must provide weed control in accordance with subsection 816.03.J of the Standard Specifications for Construction. Weed control will be at the Contractor's expense with no additional charges to the project.

d. Measurement and Payment. The completed work, as described, will be measured and paid for at the contract unit price using the following pay item:

Pay Item	**Pay Unit**
Slope Restoration, Type __	Square Yard

1. Place **Slope Restoration, Type A** in all areas not described in the other types of slope restoration and will be measured by area in square yards in place. **Slope Restoration, Type A**

includes all labor, equipment and materials required to install Topsoil Surface, Furnished or Salvaged; Fertilizer, Chemical Nutrient, Class A; Seeding Mixture; and Mulch and Mulch Anchoring which will not be paid for separately but is included in the contract unit price for **Slope Restoration, Type A**.

2. Place **Slope Restoration, Type B** parallel (6 feet minimum) to the edge of the roadway, in areas that have a 1 on 3 slope and in any ditch with a grade less than 1.5 percent, or as directed by the Engineer. **Slope Restoration, Type B** will be measured by area in square yards in place. **Slope Restoration, Type B** includes all labor, equipment and materials required to install Topsoil Surface, Furnished or Salvaged; Fertilizer, Chemical Nutrient, Class A; Seeding Mixture; and Mulch Blanket which will not be paid for separately but is included in the contract unit price for **Slope Restoration, Type B**.

3. Place **Slope Restoration, Type C** in areas that have a 1 on 2 slope, any ditch with a grade of 1.5 percent to 3 percent or as directed by the Engineer. **Slope Restoration, Type C** will be measured by area in square yards in place. **Slope Restoration, Type C** includes all labor, equipment and materials required to install Topsoil, Furnished or Salvaged; Fertilizer, Chemical Nutrient, Class A; Seeding Mixture; and High Velocity Mulch Blanket which will not be paid for separately but is included in the contract unit price for **Slope Restoration, Type C**.

4. Place **Slope Restoration, Type D** in areas that have a slope steeper than 1 on 2, any ditch with a grade steeper than 3 percent or as directed by the Engineer. **Slope Restoration, Type D** will be measured by area in square yards in place. **Slope Restoration, Type D** includes all labor, equipment and materials required to install Topsoil, Furnished or Salvaged; Fertilizer, Chemical Nutrient, Class A; Seeding Mixture; and TRM which will not be paid for separately but is included in the contract unit price for **Slope Restoration, Type D.**

MICHIGAN
DEPARTMENT OF TRANSPORTATION

SPECIAL PROVISION
FOR
INDUSTRIAL BY-PRODUCTS AND BENEFICIAL RE-USE

ENV:HLZ 1 of 1 APPR:JJG:JFS:09-11-14
APPR: FHWA: 09-11-14

a. Description. For this project, regardless of the application, the use of industrial by-products, covered in 2014 PA 178, is prohibited unless the use and application of a particular material is covered elsewhere in the contract.

MICHIGAN
DEPARTMENT OF TRANSPORTATION

SPECIAL PROVISION
FOR
NON-STRUCTURAL FLOWABLE FILL

C&T:TES 1 of 1 C&T:APPR:DMG:JAB:08-17-11

a. Description. This work consists of furnishing and placing non-structural flowable fill for abandoning pipes and miscellaneous structures; constructing miscellaneous bulkheads or forms; and backfilling. This specification is not intended to address flowable fill used as structural backfill.

b. Materials. Supply non-structural flowable fill consisting of a mixture of Portland cement, fly ash, sand (2NS) and water. Use materials conforming to the standard specifications except as modified by this special provision. All non-structural flowable fill is intended to be removable using conventional mechanical excavation methods.

Use either Type I or IA Portland cement conforming to section 901 of the Standard Specifications for Construction and Class F or C fly ash as specified by ASTM C 618 except that there is no limit on loss on ignition.

Produce a mix of cement, fly ash, sand and water in the following proportions.

Portland Cement	50 lb/cyd
Fly Ash	500 lb/cyd
Sand	2850 lb/cyd
Water	approx. 376 lb/cyd (sufficient to produce desired flowability)

c. Construction. Produce and deliver the non-structural flowable fill at a minimum temperature of 50 degrees F. Transport mixture to the point of placement in a revolving drum mixer or agitator.

Secure all pipes and conduits within the backfill area to counteract the buoyant effect of non-structural flowable fill. Place the material evenly around manholes and in utility trenches to avoid dislocating pipes and conduits.

d. Measurement and Payment. The completed work, as described, will be measured and paid for at the contract unit price using the following pay item:

Pay Item	**Pay Unit**
Flowable Fill, Non-Structural	Cubic Yard

Flowable Fill, Non-Structural includes all labor, equipment and materials required to supply and place flowable fill for the purpose of abandoning pipes and miscellaneous structures, and includes any necessary miscellaneous bulkheads for forms.

MICHIGAN
DEPARTMENT OF TRANSPORTATION

SPECIAL PROVISION
FOR
CRUSHED CONCRETE NEAR WATER

CFS:JFS 1 of 1 APPR:KAS:DBP:02-24-12
FHWA:APPR:02-24-12

Add the following paragraph after the first paragraph of Subsection 902.05 on page 743 of the Standard Specifications for Construction:

The use of crushed concrete is prohibited on the project within 100 feet of any water course (stream, river, county drain, etc.) and lake, regardless of the application or location of the water course or lake relative to the project limits.

Add the following paragraph after the first paragraph of Subsection 902.06 on page 743 of the Standard Specifications for Construction:

The use of crushed concrete is prohibited on the project within 100 feet of any water course (stream, river, county drain, etc.) and lake, regardless of the application or location of the water course or lake relative to the project limits.

Add the following paragraph after the fourth paragraph of Subsection 902.07 on page 744 of the Standard Specifications for Construction:

The use of crushed concrete is prohibited on the project within 100 feet of any water course (stream, river, county drain, etc.) and lake, regardless of the application or location of the water course or lake relative to the project limits.

MICHIGAN
DEPARTMENT OF TRANSPORTATION

SPECIAL PROVISION
FOR
ALTERNATIVE GRANULAR MATERIALS FOR FILL AND SUBBASE

CFS:SAB 1 of 1 APPR:JFS:DMG:04-03-12
FHWA:APPR:04-09-12

Delete subsection 902.07.A, on page 744, of the Standard Specifications for Construction, in its entirety and replace with the following:

A. Class I, Class IIAA, or Dense-Graded Aggregate 21A, 21AA and 22A material for Class II material;

Delete subsection 902.07.B, on page 744, of the Standard Specifications for Construction, in its entirety and replace with the following:

B. Class I, Class II, Class IIA, Class IIAA, Class IIIA or Dense-Graded Aggregate 21A, 21AA and 22A material for Class III material;

Delete subsection 902.07.C, on page 744, of the Standard Specifications for Construction, in its entirety and replace with the following:

C. Class I material for Class IIAA material; and

Add the following subsection to Section 902.07, on page 744, of the Standard Specifications for Construction.

D. Dense-Graded Aggregate 21A, 21AA and 22A material for Class IIA.

MICHIGAN
DEPARTMENT OF TRANSPORTATION

SPECIAL PROVISION
FOR
SUPERPAVE FINAL AGGREGATE BLEND REQUIREMENTS

CFS:KPK 1 of 2 APPR:JFS:CJB:05-31-18
FHWA:APPR:06-06-18

a. Description. This special provision establishes the Superpave final aggregate blend gradation requirements and the Superpave final aggregate blend physical requirements.

b. Materials. Replace Table 902-5 and Table 902-6 of the Standard Specifications for Construction with the following tables.

Table 902-5
Superpave Final Aggregate Blend Gradation Requirements

Standard Sieve	Percent Passing Criteria (control points) Mixture Number 5	4	3 Leveling Course	3 Base Course	2	LVSP (a)
1½ inch	—	—	—	—	100	—
1 inch	—	—	100	100	90–100	—
3/4 inch	—	100	90–100	90–100	≤90	100
1/2 inch	100	90–100	≤90	≤90	—	75–95
3/8 inch	90–100	≤90	—	—	—	60–90
No. 4	≤90	—	—	—	—	45–80
No. 8	47-67	39-58	35–52	23–52	19–45	30–65
No. 16	—	—	—	—	—	20–50
No. 30	—	—	—	—	—	15–40
No. 50	—	—	—	—	—	10–25
No. 100	—	—	—	—	—	5–15
No. 200	2.0–10.0	2.0–10.0	2.0–8.0	2.0–8.0	1.0–7.0	3–6

a. For LVSP, less than 50 percent of the material passing the No. 4 sieve may pass the No. 30 sieve.

Table 902-6
Superpave Final Aggregate Blend Physical Requirements

Est. Traffic (million ESAL)	Mix Type	Percent Crushed Minimum Criteria		Fine Aggregate Angularity Minimum Criteria		% Sand Equivalent Minimum Criteria		Los Angeles Abrasion % Loss Maximum Criteria		% Soft Particles Maximum Criteria (a)		% Flat and Elongated Particles Maximum Criteria (b)	
		Top & Leveling Courses	Base Course	Top & Leveling Courses	Base Course	Top & Leveling Courses	Base Course	Top & Leveling Courses	Base Course	Top & Leveling Courses	Base Course	Top & Leveling Courses	Base Course
< 0.3	LVSP	55/—	—	—	—	40	40	45	45	10	10	—	—
< 0.3	E03	55/—	—	—	—	40	40	45	45	10	10	—	—
≥0.3 -<1.0	E1	65/—	—	40	—	40	40	40	45	10	10	—	—
≥1.0 - < 3	E3	75/—	50/—	43	40	40	40	35	40	5	5	10	10
≥3 - <10	E10	85/80	60/—	45	40	45	45	35	40	5	5	10	10
≥10 - <30	E30	95/90	80/75	45	40	45	45	35	35	3	4.5	10	10
≥30 - <100	E50	100/100	95/90	45	45	50	50	35	35	3	4.5	10	10

(a) Soft particles maximum is the sum of the shale, siltstone, ochre, coal, clay-ironstone and particles that are structurally weak or are non-durable in service.
(b) Maximum by weight with a 1 to 5 aspect ratio.

Note: “85/80” denotes that 85 percent of the coarse aggregate has one fractured face and 80 percent has at least two fractured faces.

MICHIGAN
DEPARTMENT OF TRANSPORTATION

SPECIAL PROVISION
FOR
STEEL REINFORCEMENT REVISIONS

OFS:MJF 1 of 2 APPR:JSW:POJ:12-19-18
FHWA:APPR:12-19-18

Delete the first three paragraphs under subsection 905.03, on page 767 of the Standard Specifications for Construction, and replace with the following:

905.03 Steel Bar Reinforcement for Structures. Deformed steel bars used for non-prestressed concrete reinforcement must meet the requirements of ASTM A615 Grade 60, ASTM A706 Grade 60, or ASTM A996 (Type A or Type R) Grade 60, unless otherwise required.

Deformed steel bars used for prestressed concrete reinforcement must meet the requirements of ASTM A615 Grade 60, ASTM A706 Grade 60, or ASTM A996 (Type A) Grade 60, unless otherwise required.

Delete subsection 905.03.C on page 768 of the Standard Specifications for Construction, in its entirety and replace with the following:

C. **Epoxy Coating.** Epoxy coated steel reinforcement bars must be coated in accordance with ASTM A775. Epoxy coated steel welded wire reinforcement must be coated in accordance with ASTM A884, Class A, Type 1. The following exceptions and additions apply:

1. Select coating material from the Qualified Products List.

2. The Department may test samples to determine thickness of coating, adhesion of coating, and holidays. Coat more steel reinforcement than shown on the plans to allow splicing to replace steel reinforcement removed for test samples.

3. Include written certification that the reinforcing bars or steel welded wire reinforcement were cleaned, coated, and tested in accordance with ASTM A775 or ASTM A884, as applicable, from the coating applicator.

4. Repair damage to the coating in accordance with subsection 706.03.E.8.

Delete the first paragraph under subsection 905.05, on page 768 of the Standard Specifications for Construction, in its entirety and replace with the following:

Deformed steel bars must meet the requirements of ASTM A615 Grades 40, 50, or 60, ASTM A706, or ASTM A996 (Type A or Type R).

Delete subsection 905.06, on page 768 of the Standard Specifications for Construction, in its entirety and replace with the following:

905.06 Steel Welded Wire Reinforcement. Welded steel wire reinforcement must meet the requirements of ASTM A1064 and fabricated as required.

MICHIGAN
DEPARTMENT OF TRANSPORTATION

SPECIAL PROVISION
FOR
STRUCTURAL STEEL REVISIONS

OFS:JSW 1 of 1 APPR:MJF:POJ:02-09-16
FHWA:APPR:02-23-16

Delete the last sentence in the first paragraph of subsection 906.08, on page 772 of the Standard Specifications for Construction, and replace with the following:

Provide washers made from austenitic stainless steel meeting the chemical requirements of ASTM A 276 UNS designation S31600, S31603, S21800 or S20161.

MICHIGAN
DEPARTMENT OF TRANSPORTATION

SPECIAL PROVISION
FOR
RECYCLED RUBBER OR PLASTIC PRODUCTS

CFS:SCK 1 of 1 APPR:CT:POJ:07-06-15
FHWA:APPR:07-07-15

Intermediate Fence Posts. Conform to subsection 907.03 of the Standard Specifications for Construction and Standard Plan R-101 Series, except that the use of the recycled rubber or plastic posts for non-braced line posts is permitted.

Notify the Structures Technical Section, Experimental Studies Group at (517) 322-5707, at least 2 weeks prior to any installation, and submit a sample for evaluation, if required.

MICHIGAN
DEPARTMENT OF TRANSPORTATION

SPECIAL PROVISION
FOR
MISCELLANEOUS METAL PRODUCTS REVISIONS

STR:MJF 1 of 2 APPR:JSW:POJ:01-04-19
FHWA:APPR:01-10-19

Add the following paragraph to subsection 908.05, on page 782 of the Standard Specifications for Construction:

Ductile iron castings must meet the requirements of *AASHTO M306, Grade 70-50-05* or *Grade 80-55-06* when ductile iron is shown as an acceptable material on the plans. Castings must be certified by independent proof load testing at 50,000 pounds. Coat exposed surfaces with asphaltic paint. Ensure a smooth, tough, and tenacious coating when cold. Ensure the coating does not scale-off, tack, or become brittle.

Delete subsections 908.09.A and 908.09B, on pages 783 and 784 of the Standard Specifications for Construction in their entirety and replace with the following:

A. **Base Plates, Angle, and Post Elements.** Base plate, angle, rail splice, and non-tubular post elements must meet the material requirements of ASTM A36 and galvanizing requirements of ASTM A123. Tubular post elements must meet the material requirements of ASTM A500, Grade B and galvanizing requirements of ASTM A123. Silicon content must be less than 0.06 percent or from 0.15 percent to 0.25 percent. Base plate and post elements must meet the Charpy V-Notch impact requirements specified in subsection 906.04.A at a test temperature of 10 degrees Fahrenheit.

B. **Rail Elements.** Rail elements must meet the material requirements of ASTM A500, Grade B and galvanizing requirements of ASTM A123. Silicon content must be less than 0.06 percent or from 0.15 percent to 0.25 percent.

Provide the Engineer with one copy of the Mill Test Report (MTR) verifying chemical and physical requirements for structural steel rail elements. Provide an affidavit stating that the material meets specifications. If the MTR is unavailable, arrange for tests of chemical and physical properties and provide certified copies of the test reports and affidavits to the Engineer at no additional cost to the Department. The Contractor has the option of re-testing a rail sample if it failed elongation and passed all other chemical and physical requirements.

The Contractor must drop weight tear test rail elements from all heats supplied in accordance with ASTM E436 (Standard Test Method for Drop-Weight Tear Tests of Ferric Steels), except as modified herein. Drop weight tear testing is not required on TS 2 by 2 rail elements. Do not heat treat failed heats and do not provide failed heats to the fabricator. The Contractor must conduct the drop weight tear test on each heat at 0 degrees Fahrenheit on 2 inch by 9 inch specimens, supported to achieve a 7 inch span.

The Contractor must test three specimens from each of three sides that do not contain a weld to determine the percent shear area. The Contractor will disregard the shear areas of the three specimens from the side with the lowest average shear area and base the final average on the remaining six specimens. Material with an average percent shear area below 50 must be rejected by the Contractor; however, if the average percent shear area is between 30 and 50, the Department will allow the Contractor to retest the material. Retest sampling frequency is three times that of the first test and all sample test results must be included in calculating the average. The Contractor must reject material not having a minimum average percent shear area of 50 upon retest.

The manufacturer of the tubular railing must identify the product as follows:

1. Place identification before galvanizing;
2. Include heat number or other code traceable to the heat number;
3. Include manufacturer's unique identification code;
4. Place identification on only one section face;
5. Repeat identification at no more than 4-foot intervals;
6. Do not extend identification into the curved surfaces at corners of section; and
7. Do not place identification on side facing traffic or side opposite traffic.

MICHIGAN
DEPARTMENT OF TRANSPORTATION

SPECIAL PROVISION
FOR
PHYSICAL REQUIREMENTS FOR GEOTEXTILES

CFS:RBE 1 of 1 APPR:DMG:RWS:08-06-15
FHWA:APPR:08-11-15

Delete Table 910-1 on page 813 of the Standard Specifications for Construction in its entirety and replace with the following:

Table 910-1: Physical Requirements for Geotextiles

	Property				
	Grab Tensile Strength (minimum) (pounds)	Trapezoid Tear Strength (minimum) (pounds)	CBR Puncture Strength (minimum) (pounds)	Permittivity per second (minimum)	Apparent Opening Size (maximum) (millimeters)
	Test Method				
Geotextile Category	*ASTM D 4632*	*ASTM D 4533*	*ASTM D 6241*	*ASTM D 4491*	*ASTM D 4751*
Geotextile Blanket (a)	90	45	230	0.5	0.21
Geotextile Liner	200	75	440	0.5	0.21
Heavy Geotextile Liner	270	100	620	0.5	0.21
Woven Geotextile Separator (<50% elongation)	270	100	620	0.05	0.425
Non-Woven Geotextile Separator (>50% elongation)	200	75	440	0.05	0.425
Stabilization Geotextile	270	100	620	0.05	0.50
Silt Fence	100 (b)	45	---	0.1	0.60
Drainage Geocomposites	90	45	230	0.5	0.21

a. For pipe wrap where backfill around the pipe meets granular material Class IIAA requirements; geotextiles, including knitted polyester sock, which meet the following minimum requirements in the applied condition are permitted: Mass/Unit Area: 3.0 oz/yd^2; Mullen burst strength: 100 psi; maximum apparent opening size must be 0.30 mm for pavement and foundation underdrains, and 0.60 mm in other areas. The fluid displacement rate for the Mullen burst test equipment must be 170 mL/min ±5 mL/min. Subtract tare strength from the ultimate burst strength as specified in *ASTM D 3786*.

b. Elongation at the specified grab tensile strength no greater than 40% for silt fence.

MICHIGAN
DEPARTMENT OF TRANSPORTATION

SPECIAL PROVISION
FOR
WATER

CFS:TEB 1 of 2 APPR:JFS:LML:03-13-18
FHWAAPPR:03-14-18

Delete section 911, on page 814 of the Standard Specifications for Construction, in its entirety and replace with the following:

911.01. General Requirements. Water must be clean, clear, and free of oil, salt, acid, alkali, organic matter, chlorides, or other deleterious material.

911.02. Turf, Turf Establishment, and Landscape Plants. Provide water for turf, turf establishment, and landscape plants from a potable or non-potable water source approved by the Engineer. Use irrigation quality water, free of elements harmful to plant growth.

911.03. Mixing or Curing Concrete, Mortar, Grout, and Other Cementitious Products. Potable water, from sources approved by the State Department of Public Health or equivalent approved by the Engineer, is acceptable without testing.

Surface water from sources including, but not limited to ditches, lakes, ponds, quarries, rivers, streams, wetlands, and other similar untreated sources, is prohibited for mixing or curing concrete, mortar, grout, and other cementitious products. Stationary concrete batch plants may use surface water if the facility has established at least a 5-year history of producing consistent concrete products meeting the required specifications. Stationary concrete batch plants using surface water are required to meet the non-potable water sampling and testing requirements.

Non-potable must meet the requirements of Table 911-1. Do not use non-potable water unless approved by the Engineer. Test non-potable water prior to use, once per month (once per six months for stationary concrete batch plants), thereafter, and at any time the water source may be deemed out of compliance due to changing site conditions, as determined by the Engineer. Water must be sampled and tested by a qualified independent testing laboratory, having no association with the supply or production of materials produced by that concrete facility, at the expense of the Contractor. Submit test results to the Engineer for approval prior to use, and within 3 days of completion of testing. If water fails to meet the requirements of this specification, immediately suspend use of water source, bring water into compliance, and retest. Do not resume use of the water source until approved by the Engineer.

Table 911-1 Non-Potable Water Requirements		
Property	**Test Method**	**Specifications**
Total Solids (TS)	*ASTM C 1602*	≤0.30%
Total Organic Content/Carbon (TOC)	*SM 2540 E*	≤0.05%
Alkalinity-Acidity (pH)	*ASTM D 1067*	5.5 - 8.5
Chloride (CL^-)	*ASTM D 512*	≤0.05%
Time of Setting	*ASTM C 1602*	-1:00 hours to +1:30 hours of control
7-Day Compressive Strength	*ASTM C 1602*	≥90% of control

MICHIGAN
DEPARTMENT OF TRANSPORTATION

SPECIAL PROVISION
FOR
PERMANENT PAVEMENT MARKING MATERIALS

PMK:MKB 1 of 4 APPR:MWB:CRB:02-05-19
FHWA:APPR:02-21-19

Delete the content of section 920, on page 890 of the 2012 Standard Specifications for Construction in its entirety and replace it with the following:

920.01. Marking Materials. Select pavement marking materials from the Qualified Products List unless specified otherwise by special provision in the contract.

When selecting preformed thermoplastic products, ensure preformed thermoplastic materials have a thickness of 90 mils for surface applications and a thickness of 125 mils for recessed applications. For black liquid shadow markings and blue markings used in parking areas, choose a specified binder material and color from the Qualified Products List or select a white specified binder material from the Qualified Products List and tint the product to the appropriate color.

Use liquid applied pavement marking materials manufactured in the previous 12 months or within the shelf-life directed by the manufacturer, whichever is less. Use solid applied materials within the shelf-life directed by the manufacturer. Provide certification that liquid and solid applied pavement marking materials have been stored per the manufacturer's requirements. Materials not in compliance will be rejected and removed at the Contractor's expense.

Pavement marking materials must meet the general packaging and labeling requirements of subsection 920.01.A, and applicable specific material requirements of subsection 920.01.B.

A. **General Packaging and Labeling.** Material containers or packages must be marked on the tops and sides, using a durable, weather-resistant marking. Include the following information:

1. Manufacturer's name and address,
2. Description of the material,
3. Product identification number,
4. Lot or Batch number,
5. Date of manufacture,
6. Volume and
7. Weight.

B. **Packaging and Labeling for Cold Plastic and Thermoplastic Markings.**

1. **Cold Plastic.** Containers or packages of cold plastic material and the core of each roll must be marked with the information specified in subsection 920.01.A.

2. **Thermoplastic.** In addition to the requirements of subsection 920.01.A, thermoplastic material must be packaged in non-stick containers, and labeled with "heat to manufacturer-recommended temperature range," or a Department-approved equal.

920.02. Glass Beads and Wet Reflective Optics.

A. **Glass Bead and Wet Reflective Optics Packaging and Labeling.** Glass beads and wet reflective (WR) optics must be packaged in moisture resistant bags and labeled to include the following information:

1. Manufacturer's name and address,
2. Shipping point,
3. Trademark or name,
4. The wording "Glass Beads" or "the appropriate optic type",
5. Specification number,
6. Weight,
7. Lot or Batch number, and
8. Date of manufacture.

Drop-on AASHTO M247 Type I beads, herein referred to as standard glass beads, must meet the general requirements of subsection 920.02.B and the applicable requirements for specific applications of subsection 920.02.D. WR optics must meet the general requirements of subsection 920.02.C and the applicable requirements for specific applications of subsection 920.02.D. Large glass beads must meet federal specification TTB-1325 for a Type 4 glass bead.

All glass beads and WR optics to be used on Federal-aid projects must contain no more than 200 parts per million of arsenic or lead, as determined in accordance with Environmental Protection Agency testing methods 3052, 6010B, or 6010C.

B. **General Requirements for Standard Glass Beads.** Standard glass beads must meet the physical characteristics and gradation requirements specified in Table 920-1, unless otherwise specified in subsection 920.02.D for specific applications.

Table 920-1
General Requirements for Standard Glass Bead

Physical characteristics (MTM 711)	
General Appearance	Transparent, clean, smooth, free from milkiness, pits, or excessive air bubbles
Shape	Spherical with ≥75% true spheres

Color	Colorless, very light gray, very light gray tinge, or bright white
Index of Refraction	≥1.50
Alkalinity	≤2.0
Gradation Requirements (MTM 711)	
Sieve Size (No.)	**Total Percent Passing**
20	100
30	75–95
50	15–35
100	0–5

C. **General Requirements for WR Optics.** WR optics must meet the retroreflectivity requirements specified in Table 920-2.

Table 920-2
General WR Optics Requirements

Average Initial Retroreflectivity at 30 meter geometry in mcd/lux/m²		
Test Method	Color	
	White	Yellow
Dry (ASTM E 1710)	700	500
Wet Recovery (ASTM E 2177)	250	200
Wet Continuous (ASTM E 2832)	100	75

D. **Glass Bead and WR Optics Requirements for Specific Applications.** For specific applications, glass beads and WR optics must be as follows:

1. For recessed longitudinal markings, use a double drop system of large and standard glass beads, a double drop system of WR optics and standard glass beads, or an Engineer-approved alternate.

2. **Waterborne and Low Temperature Waterborne.** Standard and large glass beads for use with waterborne marking material and low temperature waterborne marking material require a moisture resistant coating and a silane coating. The type, gradation, and application rates for WR optics used with waterborne and low temperature waterborne marking materials must meet the waterborne manufacturer's recommendations.

3. **Regular Dry.** Standard and large glass beads for use with regular dry marking material may have a moisture resistant coating, a silane coating, or both. The type, gradation, and application rates for WR optics used with regular dry marking materials must meet the regular dry manufacturer's recommendations.

4. **Thermoplastic.** Standard and large glass beads for thermoplastic marking material must have a moisture resistant coating. The type, gradation, and application rates for WR optics

used with thermoplastic marking materials must meet the thermoplastic manufacturer's recommendations.

5. **Sprayable Thermoplastic.** The type, gradation, and application rates for standard and large glass beads and WR optics used with sprayable thermoplastic marking material must meet the sprayable thermoplastic manufacturer's recommendation.

6. **Polyurea.** The type, gradation, and application rates for standard and large glass beads and WR optics used with polyurea marking material must meet the polyurea manufacturer's recommendation.

7. **Modified Urethane.** The type, gradation, and application rates for standard and large glass beads and WR optics used with modified urethane marking material must meet the modified urethane manufacturer's recommendation.

MICHIGAN
DEPARTMENT OF TRANSPORTATION

SUPPLEMENTAL SPECIFICATION
FOR
ERRATA TO THE 2012 STANDARD SPECIFICATIONS

Page	Subsection	Errata
N/A	N/A	In the very beginning of the book on the page where we list the MDOT publications included by reference delete the following manual. “Work Zone Safety and Mobility Manual”
N/A*	N/A	In the very beginning of the book on the page where we list the MDOT publications included by reference replace the Field Manual of Soil Engineering (out of Print) with the following manual. “Geotechnical Manual”
3	101.02	Modify the abbreviation reading “AIS” to read “AISI”.
4*	101.02	Delete the following abbreviations and the long forms MDELEG MDNRE Add the following abbreviations and the long forms MDNR Michigan Department of Natural Resources MDEGLE Michigan Department of Environmental Great Lakes, and Energy MDLARA Michigan Department of Licensing and Regulatory Affairs NESC National Electrical Safety Code
27	103.02.B.2	Change the last sentence of the first paragraph to read "For decreases below 75 percent, the maximum allowable payment for work performed, including any adjustment, will not exceed an amount equal to 75 percent of the original contract quantity times the contract unit price."
34	104.05	The first sentence of this subsection should read "If the Contractor performs unauthorized work (work performed without the inspections required by the contract, extra work performed without Department approval, work performed contrary to the inspectors direction, or work performed while under suspension by the inspector), the Engineer may reject the unauthorized work."
46	104.12	Add the following to the end of the first paragraph "The use of right-of-way in wetlands and floodplains, or the crossing of water courses by construction equipment is prohibited."
53	105.09	Add the following to the end of the second paragraph "Any specifically produced material not purchased by the Department, will remain the

An asterisk (*) indicates an entry which has been revised from an earlier version of this Supplemental Specification.

Page	Subsection	Errata
		Contractors and must be removed from the project prior to final acceptance."
56	107.02.B.2	This sentence should read "U.S.Army Corps of Engineers' Section 404, Dredge and Fill; and Section 10, Navigable Waterway."
56*	107.02.B	Add the subsection reading as follows: “3. U.S. Coast Guard Section 9, Navigable Waterway.” Change "MDNRE" to "MDEGLE" in this subsection.
64	107.12	Change the first sentence of the first paragraph to read: “For protection of underground utilities and in accordance with 2013 PA 174, the Contractor must notify Miss Dig at least 3 work days, excluding Saturdays, Sundays and holidays, before beginning each excavation in areas where public utilities have not been previously located.”
65*	107.15.A	Change "MDNRE" to "MDEGLE" in four instances in this subsection.
66	107.15.A.3	Add the following to the end of the paragraph "Note that a burn permit from the MDNR is required for any open burning whenever the ground is not snow covered. Any individuals that allow a fire to escape will be in violation of the Natural Resources and Environmental Protection Act and will be required to reimburse the costs of suppressing the wild fire."
67*	107.16	The third sentence should read "In State Forests, the Contractor must contact the local Unit Manager, Forest Management Division, MDNR, regarding the work to be performed within or adjacent to the forest land." Delete the last sentence of the first paragraph of this subsection.
80	108.08.F	Delete the second paragraph in its entirety.
80	108.08.G	Add the following new subsection: “G. The Contractor may propose and the Engineer may approve another equitable method, supported by an acceptable rationale to determine time extensions for any of the excusable delays listed in subsection 108.08.
83	108.10.C	Change the last sentence of the first paragraph to read: “The liquidated damages may contain one or more components of damages added together.”
83	108.10.C.1	In Table 108-1 delete the last row of the table and replace it with the following: ≥50,000,000 4,500
102	109.05.E.1	Change the second sentence of the third paragraph to read: “Provide the content specified in subsection 109.05.D.11 for the applicable items in this statement and as follows:”

An asterisk (*) indicates an entry which has been revised from an earlier version of this Supplemental Specification.

Page	Subsection	Errata
107	150.04	Change the following pay item reading “Mobilization, Max __” to read “Mobilization, Max (dollar)” at nine locations throughout the subsection.
112	201.03.A.3.b	Change "MDNRE" to "MDNR" in three instances in this subsection.
123	204.04	Change the following pay item reading “Structures, Rem” to read “Structures, Rem (Structure No.)”
123	204.04	Change the following pay item reading “Concrete Barrier, Rem” to read “Conc Barrier, Rem”
150*	208.01	Change "MDNRE" to "MDEGLE" in this subsection.
180	308.03.A	Change the first sentence of the second paragraph to read: “Do not operate equipment required to place backfill directly on geotextile products.”
185	401.03.A	Change the first sentence of the second paragraph to read: Where unstable soil conditions, or obstructions other than rock, require excavation of the trench below the elevation detailed on the plans; undercut, backfill, and compact the trench as directed by the Engineer.
188	401.03.H	Change the second sentence of the paragraph to read “Jack steel pipes in place in accordance with subsection 401.03.G”.
189	401.03.N	Add the following sentence to the end of the first paragraph "Where possible, maintain the stream flow thru a temporary channel or temporary culvert." The second sentence of the second paragraph should read "Direct water from the dewatering operations through a filter bag before discharging to an existing drainage facility."
189	401.04	Change the fourth pay item from the end of the list to read as follows: “Culv, Reinf Conc Ellip, (shape) Cl __, (rise) inch x (span) inch”.
190	401.04	Change the fourth pay item from the end of the list to read as follows: “Steel Casing Pipe, __ inch, Tr Det __.”
195	402.03.C	Change the third sentence of the first paragraph to read as follows: “Wrap pipe joints, with a diameter greater than 24 inches, using geotextile blanket.”
200	402.04	Change the third pay item from the top of the list to read as follows: “Sewer, Cl __, __ inch, Jacked in Place”
200	402.04.A	Change the last sentence of the subsection to read as follows: “The unit price for **Sewer** and **Sewer, Reinf Conc, Ellip** includes the cost of excavation, backfill, geotextile blanket and mandrel testing.”

An asterisk (*) indicates an entry which has been revised from an earlier version of this Supplemental Specification.

Page	Subsection	Errata
201*	402.04.H	Change the last sentence of the first paragraph to read "The Department will not make an adjustment in the pay items of **Minor Traf Devices** or **Traf Regulator Control**."
208	403.04.D.3	Change the sentence to read: “Removing and replacing pavement adjacent to the adjusted cover per Standard Plan R-37 Series.”
218	406.03.A.2	Change the first sentence of the first paragraph to read: “Design precast box culverts less than 10 feet in span length measured along the centerline of the roadway in accordance with current AASHTO LRFD Bridge Design Specifications and ASTM C 1577.” Add the following sentence to the end of the first paragraph: “Design precast box culverts greater than or equal to 10 feet in span length measured along the centerline of the roadway for HL-93 Modified live load.”
219	406.03.B	Change the first sentence of the first paragraph to read: “Submit shop drawings for culverts greater than or equal to 10 feet in span length measured along the centerline of the roadway to the Engineer, for review and approval in accordance with subsection 104.02.”
219	406.03.C.1	Change the second sentence of the first paragraph to read: “Before manufacture, perform load ratings on precast three-sided, arch or box culverts greater than or equal to 10 feet in span length measured along the centerline of the roadway, in accordance with the AASHTO Manual of Bridge Evaluation, Section 6, Part A, the Michigan Bridge Analysis Guide current at the time load rating is performed, and the Michigan Structure Inventory and Appraisal Guide.”
223	406.03.G	Add the following after the first sentence of the second paragraph: “Where possible, maintain the stream flow thru the existing channel, temporary channel, or temporary culvert.”
224	406.03.G	Replace the fifth paragraph of this subsection with the following: “The Contractor may use cast-in-place wing walls, headwalls, and aprons, as alternatives to precast wing walls, headwalls, and aprons. Attach cast-in-place wing walls or headwalls as shown on the shop drawings.”
225	406.03.G.2	Change the third sentence of the first paragraph to read: “Before placing the open-graded aggregate 34R, compact the coarse aggregate 6A using at least three passes of a vibrating plate compactor.”
226	406.03.G.2	Change the first sentence of the second paragraph of this subsection to read:

Page	Subsection	Errata
		"Fill the space between the box culvert joints during placement of box sections with closed-cell rubber extrusion type gaskets in accordance with ASTM C 990."
226	406.04.A.9	Change the sentence to read: “Providing plan modifications including design, additional plan quantities and pay items to accommodate any changes to the precast units as shown on the plans.”
226*	406.04.A	Add the following paragraph after the last paragraph of the subsection: “The substructure design is specific to the three-sided or arch culvert detailed on the plans. The Contractor must use approved MDOT service vendors qualified in Hydraulics, Geotechnical Engineering Services, and Short and Medium Span Bridges to perform the required design and plan modifications, as directed by the Engineer, if the Contractor selects a culvert shape different than shown on the plans.”
227	406.04.B	Add the following new item in the list of items in this subsection: 2. Headwalls, wingwalls, aprons, and curtain walls, precast or cast-in-place; Renumber the exist items 2 through 4 in this list to read 3 through 5. Delete existing item numbered 5 and replace with the following: 6. Inserts for bars and connection hardware; and Renumber the existing item 6 in this list to read 7.
227	406.04.B	Delete the first and second paragraphs following the list of items in this subsection and replace with the following: “The Department will pay separately for cast-in-place concrete, other than for culvert segments, wing walls, and headwalls; excavation; protective coating; providing and placing backfill material; by plan quantity in accordance with subsection 109.01.A.”
239	501.03.C.6	The first sentence of this subsection should read "Except as specified in subsection 501.03.C.4, removing HMA surface applies to removing HMA overlying a material designated for removal or that is required to remain in place."
247	501.03.O	Change footnote e in Table 501-5 to read: "Flushing severe enough to significantly affect surface friction (Friction Number <35)."
249	501.04.H	The first sentence of this subsection should read "The Engineer will measure, and the Department will pay for removing HMA surface, no greater than 12 inches thick, overlying a material designated for removal or that is required to remain in place, as **HMA Surface, Rem**."

An asterisk (*) indicates an entry which has been revised from an earlier version of this Supplemental Specification.

Page	Subsection	Errata
		The second paragraph of this subsection should read "The Engineer will measure, and the Department will pay for removing HMA surface, greater than 12 inches thick, overlying a material designated for removal or that is required to remain in place, as **Pavt, Rem** in accordance with subsection 204.04."
257	503.03.E	Delete this subsection in its entirety.
265	504.03.E.3	Delete this subsection in its entirety.
269	504.04.A	This subsection should read "The unit prices for **Micro-Surface**, regardless of the type required, include cleaning existing pavement; applying a bond coat; temporary pavement markings; stationing; corrective action; and traffic control to complete corrective action."
299	601.04	In table 601-2 delete the row for Grade P-NC concrete in its entirety.
300	601.04	In table 601-2, the first sentence of footnote b. should read: “Use coarse aggregate 6A, 6AA or 6AAA for Grades P1, P2 and M.” In table 601-2, footnote c. should read: “The mix design basis for bulk volume (dry, loose) of course aggregate per unit volume of concrete is 72% for Grade P1; 74% for Grade P2.”
308	602.03.F	Note c. in Table 602-1 should read "Refer to Section D6 of the Materials Quality Assurance Procedures Manual for inspection procedure."
320	602.04.C.3	The last paragraph in this subsection should read "If the Engineer approves a substitution of a higher concrete grade for a lesser grade (e.g., P1 for P2), the Department will pay for the higher grade of concrete using the original bid and pay items of the lesser grade."
327	603.02	Change the second material in the list to read: “Concrete, Grade P-NC……..….603” Change the third material in the list to read: “Base Course Aggregate, 4G, 21AA, 22A……..902”
334	603.03.B.10	Change the last sentence of the second paragraph to read "Apply the required curing compound in two coats, at a rate of at least 1 gallon per 25 square yards for each coat."
342	603.04.G.3	Change "D1" to "W" in two instances in this subsection.
351	701.04	Replace Tables 701-1A and 701-1B with the Table 701-1 below.
362*	704.03.C	Change the last sentence in the first paragraph of this subsection to read: “The Engineer will consider approval after receiving applicable MDEGLE permits for the alternate method.”

An asterisk (*) indicates an entry which has been revised from an earlier version of this Supplemental Specification.

Page	Subsection	Errata
372	705.03.C.1	Add the following sentence after the first paragraph of this subsection: “Do not drive piles within a radius of 25 feet of newly placed concrete until the concrete attains at least 75 percent of its specified minimum strength.”
374	705.03.C.2.c	Change the last sentence of the second paragraph to read “Drive test piles to the minimum pile length or practical refusal, whichever is greater”.
379	705.04	Change the fifth item down the list to read: “Pile, Galv (Structure No.)”
380	705.04	Change the last item in the list to read: “Pile Driving Equipment, Furn (Structure No.)”
383	706.02	The fourth paragraph following the list of materials should read "Provide AASHTO M 270, Grade 36 steel, meeting the requirements of ASTM A 786, galvanized in accordance with section 707, for expansion joint cover plates. Provide plates at least 3/8 inch thick. Use plates with a slip resistance equal to or greater than those meeting the requirements of ASTM A 786 and must be approved by the Engineer. Provide ASTM F 593 (Type 304) stainless steel, 3/4-inch or 1/2-inch diameter, flathead countersunk screws with 3/4-inch or 1/2-inch diameter inserts for use in expansion joint cover plates."
389	706.03.D.4.b	Change the first sentence of the fourth paragraph to read "Design forms, form supports, and attachments to carry dead loads, and resultant horizontal loads due to forming of cantilever overhangs."
390	706.03.E.4	Change the forth sentence of the first paragraph to read: “Use wire ties to secure all bar intersections for the top mat. Use wire ties to secure all bar intersections for other mats where the product of the length and width of bar intersection spacing exceeds 120 square inches.”
391	706.03.E.8	Change the first sentence of the second paragraph of this subsection to read: "Patch sawed or sheared ends and visible defects in accordance with ASTM A 775."
392	706.03.E.8	Change the last sentence of the third paragraph of this subsection to read: "Coat mechanical splices after splice installation in accordance with ASTM A 775 for patching damaged epoxy coating."
394	706.03.H.1	Delete the last paragraph on page 394 and replace it with the following: “Do not cast sidewalk, curb, or barrier pours until the deck concrete attains at least the minimum specified 7-day flexural or compressive strength, and after completion of the 7-day continuous wet cure. The

Page	Subsection	Errata
		forming of succeeding portions may occur, provided the wet cure is maintained."
406*	706.03.N.1.b	Add the following to the end of the last paragraph of the subsection: "Do not discontinue wet cure nor cast succeeding portions onto the bridge deck prior to completion of the 7-day two-phase continuous wet cure. Ensure excess or ponding cure water is removed prior to casting of succeeding structure portions."
416	707.03.C.1	Change the title of the subsection from "Shop Plans to read "Shop Drawings". Change the second sentence of this subsection to read: "Do not use design drawings in lieu of shop drawings."
426	707.03.C.17	Change the second sentence in the first paragraph of this subsection to read: "Tap oversized galvanized nuts in accordance with ASTM A 563 or AASHTO M 292 and meet Supplementary Requirement S1 of ASTM A 563 or AASHTO M 292."
430	707.03.D.7.b	Delete the first sentence of the last paragraph of this subsection.
430*	707.03.D.7.b	Change the title of the Table 707-4 to read: "Minimum Bolt Tension for ASTM F 3125 Grade A 325"
430	707.03.D.7.b	Change "104,000" to "103,000" in the last row under the column titled Minimum Bolt Tension.
431	707.03.D.7.c	Add the following sentence to the end of the first paragraph of this subsection: "If using impact wrenches, provide wrenches sufficient to tighten each bolt in approximately 10 seconds."
431*	707.03.D.7.c	Change the first sentence of the second paragraph to read: "Do not reuse ASTM F 3125 Grade A 325 bolts and nuts.."
434	707.04.A	Change the first sentence of the first paragraph of this subsection to read: "The Engineer will measure structural steel by the calculated weight of metal in the finished structure, excluding filler metal in welding, as shown on the shop drawings or working drawings."
438	708.03.A.2	Change the title of the subsection from "Shop Plans to read "Shop Drawings". Change the first sentence to read: "Submit shop drawings in accordance with subsection 104.02." Change the fourth sentence to read:

Page	Subsection	Errata
		"Do not start production until the Engineer approves the shop drawings."
441*	708.03.A.11	Change the last sentence of the first paragraph to read "Cure concrete at temperatures from 70 °F to 150 °F until concrete attains the release strength shown on the shop drawings".
441	708.03.A.11	Change the fourth sentence of the fourth paragraph to read "Do not exceed a maximum concrete temperature of 150 °F during the curing cycle."
458	711.03.A	Change the first sentence in the first paragraph to read: "Shop drawings for structural steel and pipe railings are not required."
460	711.04.A	Change the second sentence of the first paragraph to read: "The unit price for **Bridge Barrier Railing** includes the cost of placing steel reinforcement, providing and placing concrete, constructing joints, and forming, finishing, curing and protecting the concrete."
461	711.04.F	The title of this subsection should read "**Reflective Marker, Permanent Barrier.**"
467	712.03.C	Add the following to the end of the third paragraph of the subsection: "Notify the Engineer of any saw cuts in the top flange. Saw cuts equal to or less than 1/32 inch deep in steel beams must be repaired by grinding, to a surface roughness no greater than 125 micro-inches per inch rms, and tapering to the original surface using a 1:10 slope. Saw cuts in excess of 1/32 inch deep in steel beams require a welded repair to be submitted to the Engineer for approval. Weld in accordance with subsection 707.03.D.8 and provide adequate notice to allow the Engineer to witness the repair work. Inspect and test all saw cut repairs (including grinding repairs) using ultrasonic testing in accordance with 707.03.D.8.c at no additional cost to the Department."
471	712.03.J	Add the following to the end of the second paragraph of the subsection: "Select adhesive anchor systems from the Qualified Products List."
471	712.03.J.1	Delete the first paragraph in this subsection and replace it with the following: "Propose complete details of drilling, cleaning, and bonding systems for anchoring reinforcement and submit for the Engineer's approval before use. The minimum embedment depth must be nine times the anchor diameter for threaded rod or bolt and twelve times the anchor diameter for reinforcing bar. Propose a drilling method that does not cut or damage existing reinforcing steel. Prepare at least three proof tests per anchor diameter and type in the same orientation in which they will be installed on the existing structure, on a separate concrete block, in the presence of the Engineer. The Engineer will proof test the proposed systems. The Engineer will base approval of the anchoring system on the following criteria:"
471	712.03.J.2	Change the third sentence of the first paragraph to read:

Page	Subsection	Errata
		“Use a tension testing device for unconfined testing, in accordance with ASTM E 488.”
473	712.03.L.2	Change the first sentence in the second paragraph of this subsection to read: "If using epoxy coated steel reinforcement, epoxy coat mechanical reinforcement splices in accordance with ASTM A 775."
473	712.03.L.3	Delete the existing first sentence in the first paragraph.
473	712.03.L.3	Change the third sentence of the first paragraph to read "Provide two test splices on the largest bar size."
473*	712.03.L.3	Change the sentence beginning “Demonstrate to the…. to read: “Demonstrate to the Engineer that splices have a tensile strength of 125 percent of the bar yield strength and high strength splices have a tensile strength of 150 percent of the bar yield strength.”
488	713.02	Add the following as subsection 713.02.C: "C. **Structural Steel for Retrofitting and Welded Repairs.** Structural steel material used for retrofitting and welded repairs of primary members as defined in subsection 707.01.B must meet longitudinal Charpy V-Notch impact test requirements."
501	715.02	Add the following material reference above the two existing items: “Sealant for Perimeter of Beam Plates.....713”
508	715.03.D.1	Add the following sentence after the second paragraph of the subsection: “Apply sealant for perimeter of beam plates in accordance with subsection 713.03.F.”
515	716.03.A	Delete the second paragraph of this subsection in its entirety. Change the last sentence of the last paragraph of this subsection to read: “Provide a primer dry film thickness for the top flange between 4 mils and 10 mils.”
519	716.04	Change the second sentence of the first paragraph of this subsection to read: "The unit price for **Field Repair of Damaged Coating (Structure No.)** includes the costs of making field repairs to the shop applied coating system; prime coat surfaces and exposed surfaces of bolts, nuts, and washers; and repairing stenciling."
521	717.04.B	This subsection should read "The unit price for **Drain Casting Assembly** includes the cost of providing and installing the downspout and, if necessary, the lower bracket to the drain casting."

An asterisk (*) indicates an entry which has been revised from an earlier version of this Supplemental Specification.

Page	Subsection	Errata
522	718.02	Change the section number "906" in the third material in the list to read "919."
533	718.04	Delete the following pay item from the list: Temp Casing……Foot
533	718.04.B.2	Delete this subsection in its entirety.
533	718.04.B.3	Renumber this subsection as follows: “2. **Permanent Casing.”**
540	802.04	Change "Non reinf" in the last pay item of the list with "Nonreinf".
545*	803.04.E	Change the second sentence of the second paragraph to read: “The unit price for **Railing for Steps** includes the cost of providing, fabricating, installing, and grouting the railing.”
560	807.04	Delete the following pay item from the list: Guardrail Buffered End .....Each
560	807.04.B	Change the fifth paragraph of this subsection to read: “The Engineer will measure **Guardrail Salv** and **Guardrail, Mult, Salv** along the face of the rail (one face for multiple beams), including terminals and end shoes.”
567	808.04.C	Change the first paragraph of this subsection to read: "The Department will not pay separately for protective fence required in accordance with subsection 104.07."
569	809.04.A	Change the first sentence to read: “The unit price for **Field Office, Cl __** includes the cost of setup, providing access, grading, maintaining, plowing snow, and utility hook-up charges.”
570	809.04.B	Delete the existing second and third sentences in the first paragraph and replace them with the following: “The unit price for **Field Office, Utility Fees** includes the cost of monthly usage fees for electricity, gas, telephone service and charges, fuel for the stove, monthly water and sanitary service.”
570	809.04.B	Change the existing fourth sentence in the first paragraph to read: “The Department will reimburse the Contractor for monthly usage fees for electricity, gas, telephone, water and sanitary charges incurred by the Department.”
575	810.03.K	Change the subsection to read "K. **Drilled Piles for Cantilever and Truss Foundations.** Construct drilled piles for cantilever and truss foundations in accordance with section 718."

An asterisk (*) indicates an entry which has been revised from an earlier version of this Supplemental Specification.

Page	Subsection	Errata
578	810.03.N.2	Add the following sentence after the first sentence of the second paragraph on this page: "Mark each nut and bolt to reference the required rotation."
584	810.04	Delete the last pay item in the list: Truss Fdn Anchor Bolts, Replace…….Each
585	810.04.B.1	Change the second paragraph to read: "The unit prices for **Fdn, Truss Sign Structure Type __, __ inch Dia, Cased** and **Fdn, Cantilever Sign Structure Type __, __ inch Dia, Cased** include the cost of concrete, slurry, steel reinforcement, permanent casings, anchor bolts, excavation, and disposal of excavated material."
585	810.04.B.2	Change the second sentence of the first paragraph to read: "The unit prices for **Fdn, Truss Sign Structure Type __, __ inch Dia, Uncased** and **Fdn, Cantilever Sign Structure Type __, __ inch Dia, Uncased** include the cost of concrete, slurry, steel reinforcement, temporary casings, anchor bolts, excavation, and disposal of excavated material."
596	811.03.G	Delete this subsection in its entirety.
597*	811.03.H	Rename this subsection as follows: "G. **Raised Pavement Marker (RPM) Removal."**
597*	811.04	Change "Crosshatching" in the last pay item of the list on this page to "Cross Hatching".
598*	811.04	Delete the following pay items from the list: Pavt Mrkg, (material), 4 inch, SRSM, (color)……Foot Pavt Mrkg, (material), 4 inch, SRSM, 2nd Application, (color)……Foot Add the following pay items to the list: "Pavt Mrkg, Polyurea, (legend)……Each Pavt Mrkg, Polyurea, (symbol)……Each" Change the sixth item down the list to read: "Pavt Mrkg, Polyurea, __ inch, Cross Hatching, (color)" Change the eleventh item down the list to read: "Rem Curing Compound, for Longit Mrkg, __ inch……Foot"
599	811.04.B	Delete this subsection in its entirety.
599	811.04	Rename the following subsections as follows: "B. **Call Back.** C. **Pavement Marking Removal.** D. **Material Deficiency."**

An asterisk (*) indicates an entry which has been revised from an earlier version of this Supplemental Specification.

Page	Subsection	Errata
602	812.03.D	Change the first sentence to read "Provide and maintain traffic control devices meeting the requirements in the ATSSA Quality Guidelines for Work Zone Traffic Control Devices and Features."
603	812.03.D.1	The last sentence on this page should read "Lay the sign behind the guardrail, with the uprights pointing downstream from the traffic, and place the support stands and ballasts close to the guardrail."
604	812.03.D.2	The first sentence of the fourth paragraph should read "Do not use burlap or similar material to cover Department or Local Government owned signs."
604	812.03.D.5	The fifth sentence of the first paragraph should read "Do not mix drums and cones within a traffic channeling sequence."
605	812.03.D.6.b	Change the first sentence of the first paragraph to read: "The Department will allow the nighttime use of 42-inch channelizing devices, in the tangent area only, on CPM and pavement marking of any duration where the use of plastic drums restricts proposed lane widths to less than 11 feet, including shy distance."
605	812.03.D.7	Add the following sentence after the first sentence of the first paragraph: "Place a shoulder closure taper in advance of the lighted arrows placed on the shoulders."
607	812.03.D.9	Delete the second paragraph of this subsection and replace with the following: "Link sections together to fully engage the connection between sections. Maintain the barrier with end-attachments engaged and within 2 inches of the alignment shown on the plans."
608	812.03.D.10.b	Delete the second sentence of the second paragraph of this subsection beginning with "Install sand module attenuators…"
608	812.03.D.10.b	Add the following sentence after the second paragraph of this subsection: "Install impact attenuation devices as shown on the plans, as directed by the Engineer, or both."
609	812.03.D.10.e	Delete the second paragraph of this subsection.
612	812.03.D.13	Delete the third paragraph of this subsection and replace it with the following: "Perform work on signals in accordance with the contract and to the requirements of NEMA TS-5 standard for those items not identified in the contract."
613*	812.03.D.14.a.iii	Change the sentence in this subsection to read "Place a terminal end shoe, in accordance with Standard Plan R-66-Series, and of appropriate type based on existing guardrail, on both blunt guardrail ends."

An asterisk (*) indicates an entry which has been revised from an earlier version of this Supplemental Specification.

Page	Subsection	Errata
615	812.03.F	The second sentence of the second paragraph of this subsection should read: "The Contractor may use a Type R temporary pavement marking cover, per subsection 812.03.D.12 when authorized by the Engineer."
616	812.03.F.2	The last sentence of the first paragraph should read: "If the removal equipment cannot collect all removal debris, operate a self-propelled sweeper capable of continuously vacuuming up the removal debris immediately behind the removal equipment."
617	812.03.G.3	The first sentence of the second paragraph should read: "Sweep the shoulder and remove debris prior to placing traffic on the shoulder and throughout the time the shoulder is used to maintain traffic."
617	812.03.G.4.a	Delete "48 inch by 48 inch" from the first sentence of this subsection.
618*	812.03.G.7	The first sentence of the first paragraph should read: "Clean barrier reflectors, plastic drums, 42 inch channelizing devices, tubular markers, signs, barricades, and attached lights in operation on the project to ensure they meet required luminosity."
619	812.03.G.8	The second sentence of the third paragraph from the end of the subsection should read: "Illuminate traffic regulator stations at night per subsection 812.03.H."
621	812.03.I.6	Delete "48 inch by 48 inch" from the second sentence of this subsection.
622*	812.03.J	The second paragraph should read "Apply one 2-inch wide horizontal stripe of red and white conspicuity tape along at least 50 percent of each side of, and across the full width of the rear of the vehicle or equipment."
622	812.04	Change the second item down the list to read: "Traf Regulator Control" Change the sixth item down the list to read: "Sign Cover, Type I"
626	812.04.I	Change the reference "812.04.E" in the first sentence to "812.04.D".
628	812.04.M.4	Add the following as the first sentence of this subsection: "The Engineer will not measure a temporary barrier ending move as **Conc Barrier Ending, Temp, Relocated** if it involves work defined in subsection 812.04.M.3."
629	812.04.N.1	Change the reference "811.04.D" in the second paragraph of this subsection to read "811.04.C".
630	812.04.S	Change the first sentence to read: "The Department will not make additional payments for traffic regulating, signing, arrow boards, and lighting systems for traffic regulator stations operated at night due to a temporary PTS system failure."

An asterisk (*) indicates an entry which has been revised from an earlier version of this Supplemental Specification.

Page	Subsection	Errata
634	813.03.C.3	Change the reference "903.07.A" in the paragraph of this subsection to read "907.07.B".
638	814.03.D	Change the second sentence to read: “Place the HMA mixture on the prepared base to a thickness of at least 2 inches, and to at least 220 pounds per square yard.”
646	815.04	Change the first, third and fourth pay items in the list to read: “Site Preparation, Max (dollar) ..... Lump Sum Watering and Cultivating, First Season, Min (dollar)..... Lump Sum Watering and Cultivating, Second Season, Min (dollar) ..... Lump Sum”
646	815.04.C.1	Change the following pay item reading: “Watering and Cultivating, First Season, Min. (dollar)” to read “Watering and Cultivating, First Season, Min (dollar)” at two locations throughout the subsection.
646	815.04.C.1.b	Delete this subsection in its entirety.
646	815.04.C.1.c	Rename this subsection to read: “b. Removal and disposal of unacceptable plants.”
646	815.04.C.2	Change the following pay item reading: “Watering and Cultivating, Second Season, Min. (dollar)” to read “Watering and Cultivating, Second Season, Min (dollar)” at three locations throughout the subsection.
647	815.04.C.2	Change the last paragraph of this subsection to read: “For each unacceptable plant identified, the Engineer will calculate a 50 percent reduction in the unit price for the relevant **(Botanical Name)** pay item, and will process a negative assessment for each unacceptable plant for that amount.”
650	816.03.B	Delete the first paragraph of this subsection and replace with the following: "Conduct soil tests when called for in the contract or when directed by the Engineer. Provide soils tests results to the Engineer when testing is required. Provide and place fertilizer as indicated below and as indicated in the soils tests, if required."
650	816.03.B.1	Change the sentence to read: "For Class A fertilizer, evenly apply 176 pounds of chemical fertilizer nutrient per acre on a prepared seed bed."
650	816.03.B.2	Change the sentence to read: "For Class B fertilizer, evenly apply 120 pounds of chemical fertilizer nutrient per acre on a prepared seed bed."
650*	816.03.B.3	Change the sentence to read: "For Class C fertilizer, evenly apply 80 pounds of chemical fertilizer nutrient per acre on established turf."

An asterisk (*) indicates an entry which has been revised from an earlier version of this Supplemental Specification.

Page	Subsection	Errata
663*	819.01	Delete the first paragraph in the subsection and replace it with the following: “This work consists of providing operating electrical and lighting units; removing, salvaging, or disposing of existing electrical and lighting components; excavating, backfilling, restoring the site in accordance with section 816; and disposing of waste excavated materials. Complete this work in accordance with this section, section 820, and the contract and to the requirements of the NEC, the National Electrical Safety Code, and the MDLARA for those items not identified in the contract.” Change the third sentence of the second paragraph in this subsection to read: “Contact the MDLARA for electrical service inspection and pay the applicable fees.”
671	819.03.F.1	Change the paragraph to read: “Install light standard foundations as shown on the plans and the standard plans, as applicable.”
673	819.03.G.4.b	Change the last sentence of the first paragraph to read: "Tighten the anchor bolts to a snug tight condition as described in the third paragraph of subsection 810.03.N.2 ensuring the lock washer is completely compressed."
673	819.03.G.4.b	Delete the first two sentences of the second paragraph and replace with the following: "Tighten bolts connecting the pole to the frangible base to a snug tight condition. Snug tight is the tightness attained by a few impacts of an impact wrench, or the full effort of a person using an ordinary spud wrench. The lock washers must be fully compressed."
678	819.04	Change the ninth pay item in the list to read: “DB Cable, 600V, 1/C# (size)..... Foot”
678*	819.04	Delete the last item in the list on this page reading: “DB Cable, in Conduit, 600 Volt, (number) 1/C# (size)..... Foot”
679	819.04	Change the first pay item in the list to read: “DB Cable, in Conduit, 600V, 1/C# (size)..... Foot”
679	819.04	Change the sixth pay item in the list to read: “Cable, P.J., 600V, 1, (size) ..... Foot”
679	819.04	Change the second pay item from the bottom of the list to read: “Conc Pole, Fit Up, (type) ..... Each”
680	819.04	Change the first paragraph to read: “Unless otherwise required, the unit prices for the pay items listed in this subsection include the cost of excavation, granular material, backfill,

Page	Subsection	Errata
		and disposal of waste excavated material. If the contract does not include pay items for restoring the site in kind in accordance with section 816, the Department will consider the cost of restoration included in the pay items listed in this subsection."
680	819.04.A	Add the following paragraph after the first paragraph of the subsection. "The unit prices for **Conduit, Rem** include the cost of removing the type, number, and size of conduit shown on the plans." Change the third paragraph of the subsection to read: "The unit prices for **Conduit, (type), __ inch** and **Conduit, DB, (number), __ inch** include the cost of installing the type, number, and size of conduit shown on the plans, and installing marking tape."
681	819.04.B	Change the last paragraph of the subsection to read: "The unit price for **DB Cable, in Conduit, Rem** includes the cost of removing all cables from the existing conduit measured per lineal foot of conduit."
681	819.04.C	Change the first paragraph of the subsection to read: "The unit prices for **Cable, Rem** and **Cable, (type), Rem** include the cost of dead ending, circuit cutting, installing guying, work required to leave circuits operable, and disposing of the removed cables, wire, hardware, and other appurtenances."
681	819.04.D	Change the first paragraph of the subsection to read: "The unit price for **Cable, Pole, (type), Disman** includes the cost of dismantling and off-site disposal of the following:"
685	820.01.D	Change the sentence to read: "Excavate, backfill, restore the site in kind in accordance with section 816, and dispose of excess or unsuitable material;"
688	820.03.C	Change the seventh paragraph of this subsection to read: "Tighten top anchor bolt nuts, snug, in accordance with the first four paragraphs of subsection 810.03.N.2, except beeswax will not be required."
696	820.04	Add the following pay items to the list: "Pedestal, Pushbutton, Alum……Each Pedestal, Pushbutton, Rem……Each"
697	820.04.A.2	Change the sentence to read: "If the contract does not include pay items for restoring the site in kind in accordance with section 816, the Department will consider the cost of restoration included in the pay items listed in this subsection."
698	820.04.B	Delete the second paragraph of this subsection found on this page.
698	820.04.C	Change "**Fdns**" to read "**Fdn**" in four instances in this subsection.

An asterisk (*) indicates an entry which has been revised from an earlier version of this Supplemental Specification.

Page	Subsection	Errata
701	820.04.J.3	Change the sentence to read: "Installing wires in the saw slots and to the handholes;"
701.	820.04.J	Add the following as a new subsection: "7. A 3/4 inch minimum flexible conduit (non-metallic and rated for underground use) from the pavement to the handhole."
706	821.01.B	Change the website address listed after the second paragraph on this page to read: "http://www.ngs.noaa.gov/heightmod/GuidelinesPublications.shtml"
711	822.03.B	Change the second paragraph to read: "If corrugations are required on concrete shoulders and the method of installation is not shown on the plans or directed by the Engineer, construct corrugations by grinding, or cutting."
718*	823.03.U	Change "MDNRE" to "MDEGLE" in four instances in this subsection.
720	823.04	Change the pay item seventh from the bottom of the list to read: "Water Shutoff, Adj, Temp, Case __"
730	824.03.Q	Change the third sentence of the fourth paragraph to read: "Ensure placement of monumentation in accordance with section 821."
730	824.03.Q	Change the first sentence of the last paragraph to read: "The Department will not pay for work dependent on lost or destroyed stakes until the Contractor replaces the stakes."
732	824.04	Change the first sentence of the first paragraph following the list of pay items to read: "If the Engineer determines the Contractor will perform staking as extra work, the Department will pay for staking in accordance with section 103."
733	824.04	Change the left column header in Table 824-2 to read: "**Percent of Original Contract Amount Earned"**
739	902.02	Change the last aggregate testing description to read: "Determining Specific Gravity and Absorption of Fine Aggregates……..MTM 321"
742	902.03.C.1.a	Change the sentence to read: "Coarse aggregate includes all aggregate particles greater than or retained on the 3/4-inch sieve."
742	902.03.C.2.a	Change the sentence to read: "Intermediate aggregate includes all aggregate particles passing the 3/4-inch sieve through those retained on the No. 4 sieve."

An asterisk (*) indicates an entry which has been revised from an earlier version of this Supplemental Specification.

Page	Subsection	Errata
742	902.03.C.2.b.iii	Change the sentence to read as follows: “Maximum Loss by Washing per MTM 108 of 3.0 percent”.
744	902.07	Delete the fourth paragraph of the subsection and replace it with the following: “The Engineer will only allow the use of granular material produced from crushed portland cement concrete for embankment and as trench backfill for non-metallic culvert and sewer pipes without associated underdrains. However, granular material produced from crushed portland cement concrete is not permitted as swamp backfill, nor within the top 3 feet below subgrade regardless of the application.
746*	902.11	Change the Item of Work by Section Number column in Table 902-1 for the 6AA row to read: "406, 601, 602, 706, 708, 806". Change the Item of Work by Section Number column in Table 902-1 for the 6A row to read: "206, 401, 402, 406, 601, 602, 603, 706, 806". Change the Item of Work by Section Number column in Table 902-1 for the 34R row to read: "401, 404, 406".
751*	902.11	Replace Table 902-6 with the Table 902-6 below.
751	Table 902-7	Under the Material column in the fourth row change the "FA2" to read "2FA".
751	Table 902-7	Under the Material column in the fifth row change the "FA3" to read "3FA".
752	Table 902-8	Under the Material column in the fourth row change the "FA2" to read "2FA".
752	Table 902-8	Under the Material column in the fifth row change the "FA3" to read "3FA".
761	Table 904-2	Delete the footnote f and any other reference to footnote f from the table.
767	905.03	Change the first sentence of the first paragraph to read: “Deformed bars, must meet the requirements of ASTM A 706, ASTM A 615, or ASTM A 996 (Type R or Type A only) for Grade 60 steel bars, unless otherwise required”.
767*	905.03	Change the first sentence of the second paragraph to read: “Unless otherwise specified, spiral reinforcement must meet the requirements of plain or deformed Grade 40 steel bars of ASTM A 615, ASTM A 996 (Type A), or the requirements of cold-drawn wire of ASTM A 1064”.
767	905.03	Change the first sentence of the third paragraph to read: “Bar reinforcement for prestressed concrete beams must meet the requirements of ASTM A 996 (Type R) for Grade 60 steel bars, except

Page	Subsection	Errata
		the Engineer will allow bar reinforcement that meets the requirements of ASTM A 615 or ASTM A 996 (Type A) for Grade 40 steel bars for stirrups in prestressed concrete beams”.
768	905.03.C	Change the first sentence in the subsection to read: "Epoxy coated steel reinforcement, if required, must be coated in accordance with ASTM A 775, with the following exceptions and additions."
768	905.03.C.3	Change the first sentence of this subsection to read: "Include written certification that the coated reinforcing bars were cleaned, coated, and tested in accordance with ASTM A 775 with the coating applicator."
768	905.05	Change the first sentence of the first paragraph to read: “Deformed steel bars must meet the requirements of ASTM A 706 or the requirements for Grade 40, Grade 50, or Grade 60 of ASTM A 615 or ASTM A 996 (Type R or Type A only)”.
768	905.06	Delete this subsection in its entirety and replace it with the following: "Deformed wire fabric for prestressed concrete and fabric for concrete pavement reinforcement must meet the requirements of ASTM A 1064 and fabricated as required."
772*	906.07	Change the first paragraph to read: "High-strength bolt fasteners for structural joints must meet the requirements of ASTM F 3125 Grade A 325 Type 1 bolts. High-strength nuts for structural joints must meet the requirements of ASTM A 563 Grade DH or AASHTO M 292 Grade 2H. High-strength washers for structural joints must meet the requirements of ASTM F 436 Type 1 for circular, beveled, clipped circular, and clipped beveled washers." Change the second sentence of the second paragraph of this subsection to read: "Galvanized nuts must be tapped oversize in accordance with ASTM A 563 and meet Supplementary Requirements S1, Lubricant and Rotational Capacity Test for Coated Nuts and S2, Lubricant Dye."
777*	907.03.D.2.a	Change the first sentence of the second paragraph to read: “Angle sections must be nominal 2½ inch by 2½ inch by ¼ inch.”
777*	907.03.D.2.b	Change the first sentence of the first paragraph to read: “Angle section braces must be nominal 1¾ inch by 1¾ inch by ¼ inch or nominal 2 inch by 2 inch $^{3}/_{16}$ inch.”
782	908.04	Change the first sentence of the first paragraph of this subsection to read: "Steel castings for steel construction must meet the requirements of ASTM A 148 for Grade 60/90 carbon steel castings, as shown on the plans, unless the Engineer approves an alternate in writing."

An asterisk (*) indicates an entry which has been revised from an earlier version of this Supplemental Specification.

Page	Subsection	Errata
784*	908.09.C	Change this subsection to read: “C. **Hardware.** Railing anchor studs must meet the requirements of ASTM A 449 Type 1. Heavy hex nuts must meet the requirements of ASTM A 563. Bolts, used as rail fasteners, must meet the requirements of ASTM F 3125 Grade A 325, Type 1. Where called for, round head bolts must meet the requirements of ASTM A 449 Type 1. The material for the railing hand hole screws must meet the requirements of ASTM A 276, Type 304. All nuts must meet the requirements of ASTM A 563 Grade DH or AASHTO M 292 Grade 2H. All flat washers must meet the requirements of ASTM F 436. Lock washers must be steel, regular, helical spring washers meeting the requirements of ANSI B18.21.1 - 1972. Bolts, nuts, washers and other hardware must be hot-dip galvanized in accordance with AASHTO M 232. Galvanized nuts must be tapped oversize in accordance with ASTM A 563, and meet Supplementary Requirements S1, Lubricant and Rotational Capacity Test for Coated Nuts, and S2, Lubricant Dye.”
784	908.11.A	Change the first sentence of the first paragraph to read: “Steel beam sections, backup elements, terminal end shoes, and special end shoes must meet the requirements of AASHTO M 180, for Class A guardrail.”
785*	908.11.B	Change the second paragraph to read: "Bolts, nuts, and round washers for guardrail, other than at bridge barrier railings, must meet the requirements of ASTM A 307 (Grade A), ASTM A 563 (Grade A with Supplementary Requirements S1 of ASTM A 563), and ASTM F 436, respectively." Change the third paragraph to read: "Washers, other than round washers, for guardrail must meet the requirements for circular washers in ASTM F 436 except that the dimensions must be as shown on the plans." Change the fifth paragraph to read: "Bolts, nuts, and washers for connections at bridge barrier railings must conform to ASTM F 3125 Grade A 325 Type 1 galvanized high-strength structural bolts with suitable nuts and hardened washers."
787	908.14.B	Add the following sentence to the end of the third paragraph of this subsection: "Exposed threaded ends of anchor bolts must be galvanized a minimum of 20 inches." Change the sixth paragraph in this subsection to read: "Provide washers meeting the requirements of ASTM F 436 for circular washers."
787	908.14.B	Change the second sentence of the fourth paragraph to read “After coating, the maximum limit of pitch and major diameter for bolts with a

Page	Subsection	Errata
		diameter no greater than 1 inch may exceed the Class 2A limit by no greater than 0.021 inch, and by no greater than 0.031 inch for bolts greater than 1 inch in diameter".
787*	908.14.C	Change the first paragraph to read "Provide either four or six high strength anchor bolts per the contract plans, meeting the mechanical requirements of ASTM F 1554, for Grade 105, with each standard. Anchor bolts for traffic signal strain poles must meet the requirements of subsection 908.14.B with the following exceptions and additions:"
789	909.03	Change the second sentence of the second paragraph to read: "As an alternative to the AASHTO M 36 requirements for metal pipe, the Contractor may use gasket material meeting the low temperature flexibility and elevated temperature flow test requirements of ASTM C 990, excluding the requirements for softening point, flashpoint and fire point."
793	909.06	Change the first sentence of the second paragraph of this subsection to read: "Provide Corrugated Polyvinyl Chloride Pipe (CPV) and required fittings meeting the requirements of AASHTO M 304."
793*	909.05.D	Change the second sentence of the paragraph to read "Provide a continuous welded joint to create a watertight casing that is capable of withstanding handling and installation stresses. Perform field welding by the SMAW process using E7018 electrodes."
794*	909.08.A	Change the first sentence to read: "Provide bridge deck downspouts of PE pipe meeting the requirements of ASTM F 714, PE 4710, DR 26."
804	Table 909-9	In the note area at the bottom of the table change the designation of the second note from "c." to "b.".
811	910.04	Add the following sentence to the end of this subsection: "Fabricate silt fence according to subsection 916.02."
814	Table 911-1	In the 4th row of the 5 rows in the table change the Property listed as "Total Organic Content (TOC)" to read "Total Organic Carbon (TOC)".
829*	912.08.K	Replace Table 912-10 with the Table 912-10 below.
833*	913.03.B	Change the first sentence of the first paragraph to read: "Clay brick, to construct manholes, catch basins, and similar structures, must meet the requirements of ASTM C 32, for Grade MS."
837*	914.04	Add the following as subsection 914.04.C: "C. **Lubricant-Adhesive for Neoprene Joint Seals**. The lubricant-adhesive must be a single-component moisture-curing polyurethane and aromatic hydrocarbon solvent mixture meeting ASTM D 2835, Type

Page	Subsection	Errata
		I. Ship in containers plainly marked with the lot or batch number of the material and date of manufacture. Store at temperatures between 58 and 80°F. Do not exceed 12 months shelf-life prior to use."
840	914.08	Change the first sentence of the second paragraph to read: "Straight tie bars for end-of-pour joints must consist of bars of the diameter and length shown on the plans meeting the requirements of ASTM A 615, ASTM A 706, or ASTM A 996 (Type R or Type A only)".
840*	914.09.A	Change the first sentence of the first paragraph to read: "Straight tie bars for longitudinal pavement joints must consist of bars of the diameter and length shown on the plans meeting the requirements of ASTM A 615, ASTM A 706, or ASTM A 996 (Type R or Type A only)".
840	914.09.B	Change the first sentence of the first paragraph to read: "Bent tie bars for bulkhead joints must consist of bars of the diameter and length shown on the plans."
841*	914.13	In the first sentence of this subsection change "ASTM D 1248, for Type III, Class B" to read "ASTM D 4976, Group 2, Class 4, Grade 4".
844	916.01.A	Change the first sentence to read: "Cobblestone must consist of rounded or semi-rounded rock fragments with an average dimension from 3 inches to 10 inches."
845	916.01.D.1	Change the second sentence to read: "Checkdams for ditch grades 2 percent or greater must be constructed using cobblestone or broken concrete ranging from 3 inches to 10 inches in size."
851*	917.10.B.1	Delete the paragraph and replace it with the following: "1. **Class A.** Provide and apply Class A chemical nutrient fertilizer either according to MSU Soil Testing Lab Recommendations for Phosphorus Applications to Turfgrass, except the maximum single application rate of nutrient will be 48 pounds per acre, when soil tests are required or as indicated in subsections 917.10.B.1.a and 917.10.B.1.b."
851	917.10.B.1	Add the MSU Soil Testing Lab Recommendations for Phosphorus Applications to Turfgrass, found below, after the first paragraph of this subsection.
853	917.15.B.1	Change the second sentence of the subsection to read: "The net must meet the requirements of subsection 917.15.D and be capable of reinforcing the blanket to prevent damage during shipping, handling, and installation."
857	918.01	Add the following two paragraphs following the first paragraph of this subsection: "Wall thickness and outside diameter dimensions must conform to ASTM D 1785 for smooth-wall schedule 40 and 80 PVC conduit

Page	Subsection	Errata
		material. The Department will allow no more than 3 percent deviation from the minimum wall thickness specified. Wall thickness range must be within 12 percent in accordance with ASTM D 3035 for smooth-wall coilable schedule 40 and 80 PE conduit.”
858	918.01.E	Delete the first three sentences of the second paragraph shown on page 858.
863	918.06.F.1	Delete the third paragraph in this subsection in its entirety and replace it with the following: "Provide smooth or deformed welded wire fabric in accordance with ASTM A 1064."
864	918.07.C	Change the first sentence of the first paragraph to read: “Provide anchor bolts, nuts, and washers meeting the requirements of subsection 908.14.A and subsection 908.14.B.”
864	918.07.C	Delete the second sentence of the second paragraph.
864	918.07.C	Change the third sentence to read: “Provide anchor bolts threaded 4 inches beyond the anchor bolt projection shown on the plans.”
867	918.08.C	Change the last sentence of the first paragraph on this page to read: “Galvanize bolts, nuts, washers, and lock washers as specified in subsection 908.14.B.”
867	918.08.C	Change the last sentence of the subsection to read: “Provide each frangible base with manufacturer access covers as shown on the plans.”
867*	918.08.D	Delete this subsection in its entirety and replace with the following: "Provide galvanized anchor bolts, studs, nuts, couplings, and washers in accordance with subsection 908.14."
879	918.10.J	Change the third sentence of the second paragraph of this subsection to read: "Provide anchor bolts and associated nuts, washers, and hardware meeting the requirements of subsection 908.14."
887	919.06	Change the second paragraph to read: “Shims must be fabricated from brass shim stock or brass strip meeting the requirements of ASTM B 36, for copper alloy UNS No. C26000, half-hard rolled temper, or fabricated from galvanized sheeting meeting the requirements of ASTM A 653, for Coating Designation G 90.”
887	919.07.C	Change the sentence to read:

Page	Subsection	Errata
		"Galvanized high-strength steel bolts, nuts, and washers for connecting arm connection flanges must meet the requirements of subsection 906.07."
903	921.03.D	Delete the last three sentences of the first paragraph of this subsection.
914	921.05.D	Change the first sentence of this subsection to read: "Provide anchor bolts meeting the requirements of subsection 908.14.C, including elongation and reduction of area requirements."
916	921.07	Change the first sentence of the first paragraph to read: "Provide LED case signs internally illuminated by LEDs and changeable message case signs internally illuminated with LED light sources."
936	922.04.B	In the first sentence of the first paragraph change the "R-52" to "R-126".
936	922.04.B	Add the following to the end of the first paragraph: "Hardware used to connect the end section to the barrier must meet the requirements of NCHRP 350 or MASH (Test Level 3 or higher)."
936	922.04.B	In the first sentence of the second paragraph delete "R-52".
936	922.04.B	Change the fourth paragraph of this subsection to read as follows: For all endings requiring impact attenuators provide a NCHRP-350 Test Level 3 or MASH Test Level 3 approved impact attenuation system, unless otherwise approved by the Engineer.
952	Pay Item Index	Change the following pay items to read: "Conc Barrier, Rem.....123 204" "Conc Pole, Fit Up, (type) .....679 819"
953*	Pay Item Index	Delete the following pay item reading: "DB Cable, in Conduit, 600 Volt, (number) 1/C# (size).....678 819"
957	Pay Item Index	Delete the following pay item from the list: Guardrail Buffered End 560 807
960	Pay Item Index	Change the following pay item to read: "Mobilization, Max (dollar).....107 150"
961	Pay item Index	Delete the following pay items from the list: Pavt Mrkg, (material), 4 inch, SRSM, (color)……598……811 Pavt Mrkg, (material), 4 inch, SRSM, 2nd Application, (color)……598…..…811
961	Pay Item Index	Change the following pay items in the list to read: Pavt Mrkg, Ovly Cold Plastic, 12 inch, Cross Hatching, (color) Pavt Mrkg, Polyurea, __ inch, Cross Hatching, (color) Add the following pay items to the list:

An asterisk (*) indicates an entry which has been revised from an earlier version of this Supplemental Specification.

Page	Subsection	Errata
		“Pavt Mrkg, Polyurea, (legend)……598…….811 Pavt Mrkg, Polyurea, (symbol)……598…….811 Pedestal, Pushbutton, Alum……....696…….820 Pedestal, Pushbutton, Rem……..…….696…….820”
962	Pay Item Index	Change the following pay items in the list to read: “Pile Driving Equipment, Furn (Structure No.) Pile, Galv (Structure No.)”
963	Pay Item Index	Change the following pay item to read: “Rem Curing Compound, for Longit Mrkg, __ inch .....598 811”
964	Pay Item Index	Change the following pay item to read: “Sewer, Cl __, __ inch, Jacked in Place.....200 402” “Sign Cover, Type I.....622 812”
965*	Pay Item Index	Change the following pay item in the list to read: “Steel Casing Pipe, __ inch, Tr Det __ Site Preparation, Max (dollar) .....646 815”
966	Pay Item Index	Change the following pay item to read: “Structures, Rem (Structure No.).....123 204”
966	Pay Item Index	Delete the following pay item form the list; Temp Casing……...533……718
967*	Pay Item Index	Delete the following pay item from the list; Truss Fdn Anchor Bolts, Replace……...584……810
967	Pay Item Index	Change the following pay item in the list to read: “Traf Regulator Control”
968*	Pay item Index	Change the following pay item in the list to read: “Water Shutoff, Adj, Temp, Case __ Watering and Cultivating, First Season, Min (dollar).....646 815 Watering and Cultivating, Second Season, Min (dollar) .....646 815”
993	General Index	Change “Shop Plans (see Plans and Working Drawings)” to read “Shop Drawings (see Plans and Working Drawings)”.

An asterisk (*) indicates an entry which has been revised from an earlier version of this Supplemental Specification.

Table 701-1
Concrete Structure Mixtures

Concrete Grade (e,h)	Section Number Reference (i)	Cement Content per cyd (b,c)		Slump (inches)				Minimum Strength of Concrete (f)					
					Type MR, F, or G Admixtures (g)			Flexural (psi)			Compressive (psi)		
		lb	sack	Type A, D or no Admixture	Before Admixture	After Admixture (Type MR)	After Admixture (Type F or G)	7 Day	14 Day	28 Day (Class Design Strength)	7 Day	14 Day	28 Day (Class Design Strength)
D (a)	706, 711, 712	658 (d)	7.0	0 - 3	0 - 3	0 - 6	0 - 7	625	700	725	3,200	4,000	4,500
S1	705	611	6.5	3 - 5	0 - 3	3 - 6	3 - 7	600	650	700	3,000	3,500	4,000
T	705, 706	611	6.5	3 - 7	0 - 4	3 - 7	3 - 8	550	600	650	2,600	3,000	3,500
S2 (a)	401, 705, 706, 712, 713, 801, 802, 803, 810	564	6.0	0 - 3	0 - 3	0 - 6	0 - 7	550	600	650	2,600	3,000	3,500
		526 (d)	5.6										
S3	402, 403, 803, 804, 806	517	5.5	0 - 3	0 - 3	0 - 6	0 - 7	500	550	600	2,200	2,600	3,000
		489 (d)	5.2										

a. Unless otherwise required, use Coarse Aggregate 6AA or 17A for exposed structural concrete in bridges, retaining walls, and pump stations.
b. Do not place concrete mixtures containing supplemental cementitious materials unless the local average minimum temperature for the next 10 consecutive days is forecast to be above 40 °F. Adjustments to the time required for opening to construction or vehicular traffic may be necessary. Cold weather protection may be required, as described in the quality control plan. The restriction does not apply to Grade S1 concrete in foundation piling below ground level or Grade T concrete in tremie construction.
c. Type III cement is not permitted
d. Use admixture quantities specified by the Qualified Products Lists to reduce mixing water. Admixture use is required for Grade D, Grade S2, and Grade S3, concrete with a reduced cement content. Use a water-reducing retarding admixture at the required dosage for Grade D concrete to provide the setting retardation required. When the maximum air temperature is not forecast to exceed 60 °F for the day, the Contractor may use a water-reducing admixture or a water-reducing retarding admixture. Ensure Grade D concrete in concrete diaphragms contains a water-reducing admixture, or a water-reducing retarding admixture. For night casting, the Contractor may use a water-reducing admixture in lieu of water-reducing retarding admixture, provided that the concrete can be placed and finished prior to initial set.
e. The mix design basis for bulk volume (dry, loose) of coarse aggregate per unit volume of concrete is 68% for Grade S1, and 70% for Grade D, Grade S2, Grade T, and Grade S3.
f. The Contractor may use flexural strength to determine form removal. Use compressive strength for acceptance in other situations.
g. MR = Mid-range.
h. The Engineer will allow the use of an optimized aggregate gradation as specified in section 604.
i. Section Number Reference:

401	Culverts	711	Bridge Railings	803	Concrete Sidewalk, Sidewalk Ramps, and Steps
402	Storm Sewers	712	Bridge Rehabilitation-Concrete	804	Concrete Barriers and Glare Screens
403	Drainage Structures	713	Bridge Rehabilitation-Steel	806	Bicycle Paths
705	Foundation Piling	801	Concrete Driveways	810	Permanent Traffic Signs and Supports
706	Structural Concrete Construction	802	Concrete Curb, Gutter and Dividers		

An asterisk (*) indicates an entry which has been revised from an earlier version of this Supplemental Specification.

Table 902-6
Superpave Final Aggregate Blend Physical Requirements

Est. Traffic (million ESAL)	Mix Type	Percent Crushed Minimum Criteria		Fine Aggregate Angularity Minimum Criteria		% Sand Equivalent Minimum Criteria		Los Angeles Abrasion % Loss Maximum Criteria		% Soft Particles Maximum Criteria (b)		% Flat and Elongated Particles Maximum Criteria (c)	
		Top & Leveling Courses	Base Course	Top & Leveling Courses	Base Course	Top & Leveling Courses	Base Course	Top & Leveling Courses	Base Course	Top & Leveling Courses	Base Course	Top & Leveling Courses	Base Course
< 0.3	LVSP	55/—	—	—	—	40	40	45	45	10	10	—	—
< 0.3	E03	55/—	—	—	—	40	40	45	45	10	10	—	—
≥0.3 -<1.0	E1	65/—	—	40	—	40	40	40	45	10	10	—	—
≥1.0 - < 3	E3	75/—	50/—	40(a)	40(a)	40	40	35	40	5	5	10	10
≥3 - <10	E10	85/80	60/—	45	40	45	45	35	40	5	5	10	10
≥10 - <30	E30	95/90	80/75	45	40	45	45	35	35	3	4.5	10	10
≥30 - <100	E50	100/100	95/90	45	45	50	50	35	35	3	4.5	10	10

(a) For an E3 mixture type that enters the restricted zone as defined in Table 902-5, the minimum is 43. If these criteria are satisfied, acceptance criteria and associated incentive/disincentive or pay adjustment tied to this gradation restricted zone requirement included in contract, do not apply. Otherwise, final gradation blend must be outside of the restricted zone.

(b) Soft particles maximum is the sum of the shale, siltstone, ochre, coal, clay-ironstone and particles that are structurally weak or are non-durable in service.

(c) Maximum by weight with a 1 to 5 aspect ratio.

Note: “85/80” denotes that 85 percent of the coarse aggregate has one fractured face and 80 percent has at least two fractured faces.

An asterisk (*) indicates an entry which has been revised from an earlier version of this Supplemental Specification.

Table 912-10 Minimum Retention Requirements				
Preservative	**Minimum Retention, (pcf)**			**AWPA Standard**
	Guardrail Posts	**Sign Posts**	**Blocks**	
Pentachlorophenol	0.60	0.50	0.40	A6
CCA, ACZA	0.60	0.50	0.40	A11
ACQ (a)	0.60	Not Allowed	0.40	A11
CA-B (a)	0.31	Not Allowed	0.21	A11
CA-A (a)	0.31	Not Allowed	0.15	A11
Other Waterborne preservatives	AWPA Commodity Specification A, Table 3.0, Use Category 4B	Not Allowed	AWPA Commodity Specification A, Table 3.0, Use Category 4A	A11
a. Non-Metallic washers or spacers are required for timber and lumber treated with ACQ or CA placed in direct contact with aluminum. Do not use with sign posts.				

MSU Soil Testing Lab Recommendationsfor Phosphorus Applications to Turfgrass
3/8/2012

		Sand based rootzone establishment	Golf greens and tees est. or mature; Kentucky bluegrass or perennial ryegrass athletic fields est. or mature; sand based rootzone mature	Lawns, golf course fairways; establishment or mature	Establishment without soil test
Bray P1, Mehlich 3 Soil Test Value (ppm): pH<7.4	Olsen Soil Test Value (ppm) pH>7.4	Recommendation (lbs. P_2O_5/1000 ft.2)	Recommendation (lbs. P_2O_5/1000 ft.2)	Recommendation (lbs. P_2O_5/1000 ft.2)	Recommendation (lbs. P_2O_5/1000 ft.2)
					2.5 lbs. year (Maximum single application of 1.5 lbs.) 109 lbs/acre year (maximum single application of 65 lbs/acre)
0	0	4.4	3.4	2.5	
2	1.3	4.1	3.1	2.2	
4	2.7	3.9	2.7	1.9	
6	4	3.6	2.4	1.6	
8	5.3	3.4	2.0	1.3	
10	6.7	3.1	1.7	1.0	
12	8	2.8	1.4	0.7	
14	9.3	2.6	1.0	0.4	
16	10.7	2.3	0.7	0.1	
18	12	2.1	0.3	0.0	
20	13.3	1.8	0.0		
22	14.7	1.5			
24	16	1.3			
26	17.3	1.0			
28	18.7	0.8			
30	20	0.5			
32	21.3	0.2			
34	22.7	0.0			

Web resources: www.turf.msu.edu or www.bephosphorussmart.msu.edu

An asterisk (*) indicates an entry which has been revised from an earlier version of this Supplemental Specification.

PERMITS

HOUGHTON COUNTY DRAIN COMMISSIONER

401 E. HOUGHTON AVENUE
HOUGHTON, MI 49931
Phone (906) 482-4491 FAX (906) 482-7238
jpekkala@houghtoncounty.net

February 24, 2021

Michael Markham, PE
OHM Advisors
424 Hancock Street
Hancock, MI 49930

RE: Soil Erosion and Sedimentation Control Permit No. 21-271-SE

Dear Mr. Markham:

Enclosed is a Soil Erosion and Sedimentation Control (SESC) Permit for the proposed earth change at the location specified on the permit. The SESC Site Plan that was submitted has been approved and is on file at the Houghton County Drain Commissioner's Office. Please notify my office 48 hours prior to commencing the earth change.

If you have any questions, feel free to contact me.

Sincerely,

John Pekkala

John Pekkala, Drain Commissioner
County Enforcing Agent for
Soil Erosion and Sedimentation Control

319

COUNTY OF HOUGHTON
SOIL EROSION AND SEDIMENTATION CONTROL PERMIT

(issued under the authority of part 91, Soil Erosion and Sedimentation Control, of the Natural Resources and Environmental Protection Act, 1994 PA 451, as amended)

Permitee: City of Hancock

Address: Mary Babcock, City Manager
399 Quincy Street
Hancock, MI 49930

Permit No.: 21-271-SE
Issued: 02-24-21
Expires: 02-24-22
Extended:

On-Site Responsible Person: Name: TBD

Company: _____ Telephone Number:(____) _____

Permitted Activity:

This project is to repair flood damage from the 2018 Fathers Day Flood. Damage repairs include, storm sewer repair, pavement repair, curb and gutter repair, slope restoration and associated work related to the above items.

Project Location: Town: 55N ; Range: 34W ; Section: 26,34 & 35

City or Township: City of Hancock
Address: see construction plans for City of Hancock Storm Sewer Repairs Phase II

Permit Conditions:

1. The permitted activity shall be completed in accordance with the approved plans and specifications and the attached general and specific conditions.
2. This permit does not waive the necessity for obtaining all other required federal, state, or local permits.
3. Permitee shall notify the permitting agency within one week after completing the permitted activity or one week prior to the permit expiration date, whichever comes first.

John Pekkala
Permitting Agent

(906) 482-4491
Telephone Number

THIS PERMIT MUST BE POSTED AT THE PROJECT SITE.

320

Permit Number: 21-271-SE

General Conditions:

In accordance with rule 1709 promulgated under the authority of part 91, Soil Erosion and Sedimentation Control, of the Natural Resources and Environmental Protection Act, 1994 PA 451, as amended, and in addition to the information on the attached plan(s) and special conditions, the following general conditions apply to the earth change authorized by this permit:

- Design, construct, and complete the earth change in a manner that limits the exposed area of disturbed land for the shortest period of time.
- Remove sediment caused by accelerated soil erosion from runoff water before it leaves the site of the earth change.
- Temporary or permanent control measures shall be designed and installed to convey water around, through, or from the earth change at a non-erosive velocity.
- Install temporary soil erosion and sedimentation control measures before or upon commencement of the earth change activity and maintain the measures on a daily basis. Remove temporary soil erosion and sedimentation control measures after permanent soil erosion measures are in place and the area is stabilized. (Stabilized means the establishment of vegetation or the proper placement, grading; or covering of soil to ensure its resistance to soil erosion, sliding, or other earth movement.)
- Complete permanent soil erosion control measures for the earth change within five calendar days after final grading or upon completion of the final earth change. If it is not possible to permanently stabilize the earth changes, then maintain temporary soil erosion and sedimentation control measures until permanent soil erosion control measures are in place and the area is stabilized.

SPECIFIC CONDITIONS

48 hours notice prior to earth change

321

SOIL EROSION AND SEDIMENTATION POLLUTION CONTROL APPLICATION

Part 91, P.A. 451 of 1994

Houghton County Drain Commissioner
401 E. Houghton Avenue
Houghton, MI 49931
(906) 482-4491

Permit Number	21-271-SE
Date Issued	2-24-21
Expiration Date	2-24-22
Permit Fee $	200.00

For Questions, please call: *John Pekkala -Office (906) 482-4491*
Home (906) 482-0765

Receipt # 973522

1. APPLICANT (Please check if the applicant is the landowner or designated agent*) ( ) Landowner (x) Designated Agent

Name Michael Markham, OHM Advisors		Address 424 Hancock Street	
City Hancock	State MI	Zip 49930	Area Code/Telephone (906) 482-0535

2. LOCATION	Section 26,34,35	Town 55N	Range 34W	Lot No(s)	Township	Street Address: Various Locations in Hancock
City/Village Hancock					Property ID # or Attach Property Legal Description:	

3. PROPOSED EARTH CHANGE — **Project Type:** ( ) Residential ( ) Multi-Family ( ) Commercial ( ) Industrial ( ) Land Balancing (x) Other

Describe Project: This project is to repair flood damage from the 2018 Fathers Day Flood. Damage repairs include, storm sewer repair, pavement repair, curb and gutter repair, slope restoration and associated work related to the above items.			Size of Earth Change (Acres or Square Feet) 0.42 Acres
Distance to Nearest Lake, Stream or Dam 125 ft.	Watercourse(s) Affected: Portage Canal	Project Start Date: After Spring Road Restrictions	Project Complete Date: Fall 2021

4. SOIL EROSION AND SEDIMENT POLLUTION CONTROL PLAN
(Note: Two (2) sets of complete plans must be attached.)

Estimated Cost of Erosion & Sedimentation Control $ $5,000	Plan Preparer's Name and Telephone Number: Michael Markham, OHM Advisors Area Code (906) 482-0535

5. PARTIES RESPONSIBLE FOR EARTH CHANGE: Property Owner of Record (If not provided in Box No.1 above)
NAME: City of Hancock, Mary Babcock

Address	City	State	Zip	Area Code/Telephone
399 Quincy Street	Hancock	MI	49930	(906) 482-1121

6. Name of Individual "On Site" Responsible for Earth Change CONTRACTOR TO BE DETERMINED		Company Name		
Address	City	State	Zip	Area Code/Telephone

I (we) affirm that the above information is accurate and that I (we) will conduct the above described earth change in accordance with Part 91, Soil Erosion and Sedimentation Control, of the Natural Resource and Environmental Protection Act, 1994 PA 451, as amended, applicable local ordinances, and the documents accompanying this application.

Landowner's Signature **Date:**

Designated Agents Signature* Michael J. Markham, Jr. Digitally signed by Michael J. Markham, Jr. DN: CN="Michael J. Markham, Jr.", E=michael.markham@ohm-advisors.com, O=State of Michigan, C=US Date: 2021.02.19 14:32:17-05'00' **Date:** 2/19/2021

*** Designated agent must have a written statement from landowner authorizing him/her to secure a permit in the landowner's name.**

322

Houghton County Building Department

906.482.2260
401 E. Houghton Ave.
Houghton, MI, 49931
http://www.houghtoncounty.net/
(Customer Copy)
(Sale)

Name: Deana Paoli-Wuori / OHM
Address:
Amount: $200.00
Conv Fee: $6.00
Total: $206.00
Card: Visa 3565
Card: xxxx3565
Invoice: M12513 C12514
Billing Trans ID: M369549959
Convenience Fee Trans ID: C369549974
Reference: Soil Erosion for Flood Damage Repair
Trans Date: 2/23/2021 11:50:10 AM
Clerk: building1
NOTE:

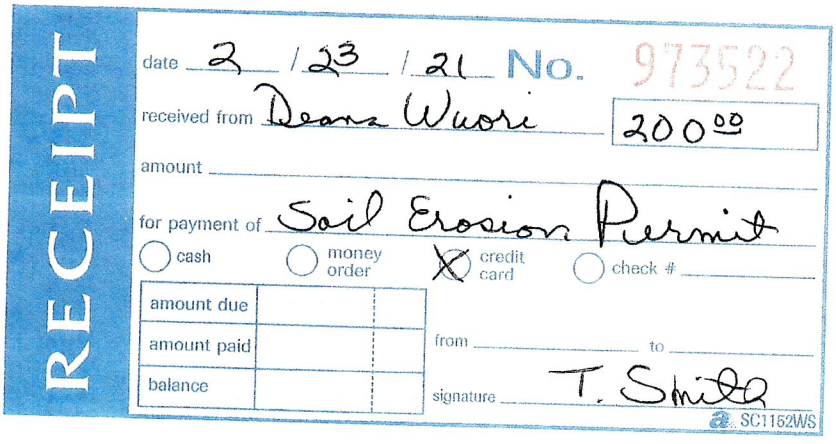
RECEIPT
date 2 / 23 / 21 No. 973522
received from Deana Wuori 200 00
amount
for payment of Soil Erosion Permit
cash money order credit card (X) check #
amount due
amount paid
balance
from to
signature T. Smith
SC1152WS

323

HOUGHTON COUNTY DRAIN COMMISSIONER
SOIL EROSION/SEDIMENTATION CONTROL
401 E. Houghton Avenue
Houghton, MI 49931
Phone (906)482-4491 FAX (906)482-7238

LETTER OF AUTHORIZATION

(Note: Complete this form only if the permit applicant or primary contact person is not the landowner of record.)

Type of Project: STORM SEWER REPAIRS PHASE II

Location of Project: VARIOUS SITES AROUND CITY OF HANCOCK

Township/City: CITY OF HANCOCK

Property Tax ID#: N/A

As landowner of the property described above, I authorize the person indicated below to act on my behalf for the purposes of this application for a Soil Erosion and Sediment Control Permit pursuant to Part 91, Soil Erosion and Sedimentation Control, of the Natural Resources and Environmental Protection Act, Act No. 451 of the Public Acts of 1994, as amended. I understand that I am responsible for all earth changes related to this project and understand that Part 91, Act 451 may be enforced against me in the event of any violation of that Act.

LANDOWNER:

Mary Babcock
(Please print or type)

Mary Babcock
(Signature)

399 Quincy St Hancock MI 9064822720
(Address and Phone Number)

LANDOWNER'S AUTHORIZED AGENT:

MICHAEL MARKHAM
(Please print or type)

324

MDOT
Michigan Department of Transportation

INDIVIDUAL CONSTRUCTION PERMIT

For Operations within State Highway Right-of-Way

Issued To:
City of Hancock

399 QUINCY ST
HANCOCK MI 49930-1801

Contact:
Trent Rajala
906-696-7126(O) 906-231-0089(Cell)
trent.rajala@ohm-advisors.com

Secondary Contact:
Bill Marlor
906-482-1480(O) 906-370-8968(Cell)
hancock.dpw.bill@gmail.com

Permit Number: 31052-075541-21-031021
Permit Type: Individual Application
Permit Fee:
Effective Date: Mar 10, 2021 to Mar 10, 2022
Bond Numbers:
Liability Insurance Expiration Date:

THIS PERMIT IS VALID ONLY FOR THE FOLLOWING PROPOSED OPERATIONS:

PURPOSE:

Various street rehabilitation through-out the City of Hancock. Permit is for construction signage on US-41 in downtown Hancock. Construction signage will be placed to alert the motoring public. Work will happen on Tezcuco Street from US-41 to Navy Street. This is a FEMA job repairing damage from the 2018 Fathers Day flood.

STATE ROUTE: US-41 **CITY OF:** Hancock **COUNTY:** Houghton County

NEAREST INTERSECTION:	SIDE OF ROAD:	DISTANCE TO NEAREST INTERSECTION: (in feet)	DIRECTION TO NEAREST INTERECTION:
M-26/US-41	E	1,578.00	East

CONTROL SECTION:	MILE POINT FROM:	MILE POINT TO:	LOCATION: LEFT	MEDIAN	RIGHT	TRANSVERSE
31052	0.110	0.390	X		X	

REQUISITION NUMBER: **WORK ORDER NUMBER:** **MDOT JOB NUMBER:** **ORG JOB NUMBER:**

31052-075541-21-031021 Issued To:City of Hancock

This permit is incomplete without "General Conditions and Supplemental Specifications"

I certify that I accept the following:

1. I am the legal owner of this property or facility, the owner's authorized representative, or have statutory authority to work within state highway Right-of-Way.
2. Commencement of work set forth in the permit application constitutes acceptance of the permit as issued.
3. Failure to object, ***within ten (10) days*** to the permit as issued constitutes acceptance of the permit as issued.
4. If this permit is accepted by either of the above methods, I will comply with the provisions of the permit.
5. I agree that Advance Notice for Permitted Activities for shall be submitted **5 days prior** to the commencement of the proposed work.

   I agree that Advance Notice for Permitted Utility Tree Trimming and Tree Removal Activities shall be submitted **15 days prior** to the commencement of the proposed work for an annual permit.

CAUTION

Work shall NOT begin until the Advance Notice has been approved.

Failure to submit the advance notice may result in a Stop Work Order.

City of Hancock	**Benjamin Carrigan** **MDOT**	March 10, 2021 **Approved Date**
TSC Contact Info	**Ishpeming TSC**	**(906) 485-4270**

THE STANDARD ATTACHMENTS, ATTACHMENTS AND SPECIAL CONDITIONS MARKED BELOW ARE A PART OF THIS PERMIT.

STANDARD ATTACHMENTS:

1 Mobility Flowchart for Permit Activities (2204C)
2 General Conditions for Permit (General Conditions)
3 System Operation Advisory-Fluorescent Sheeting Implementaton Sept. 20, 2016 (SOA[Fluorescent Sheeting

31052-075541-21-031021 Issued To:City of Hancock

ADDITIONAL ATTACHMENTS:

1 Segment 001 of 01_14_2021 WO8 Plans.pdf
2 Segment 002 of 01_14_2021 WO8 Plans.pdf
3 Segment 003 of 01_14_2021 WO8 Plans.pdf
4 Traffic Control Plan.pdf
5 Const. Advisory Historical_Archaelogica.pdf
6 Enviro ROW.pdf
7 General Conditions.pdf
8 wzd-125-e.pdf
9 Hancock City12.21.16.pdf
10 L D and B Valuesm0020a.pdf
11 m0730aDividedLaneClosure.pdf

AMENDMENT ATTACHMENTS:

SPECIAL CONDITIONS:

1 The Department of Transportation does not, by issuance of this permit, assume any liability claims or maintenance costs resulting from the flood repair facility placed by this permit. The Department reserves the right to require removal of all or any portion of this facility as needed for highway maintenance or construction purposes without replacement or reimbursement of any costs incurred by the permitted or other party. The permitted will defend, indemnify and hold harmless the Department for any claims whatsoever resulting from the construction or the removal of the authorized by this permit.
2 All disturbed areas within the right of way shall be top-soiled, seeded and mulched to match existing areas per current MDOT standards and specifications.

Michigan Department
Of Transportation
2204C (11/08)

Mobility Flowchart for Permit Activities

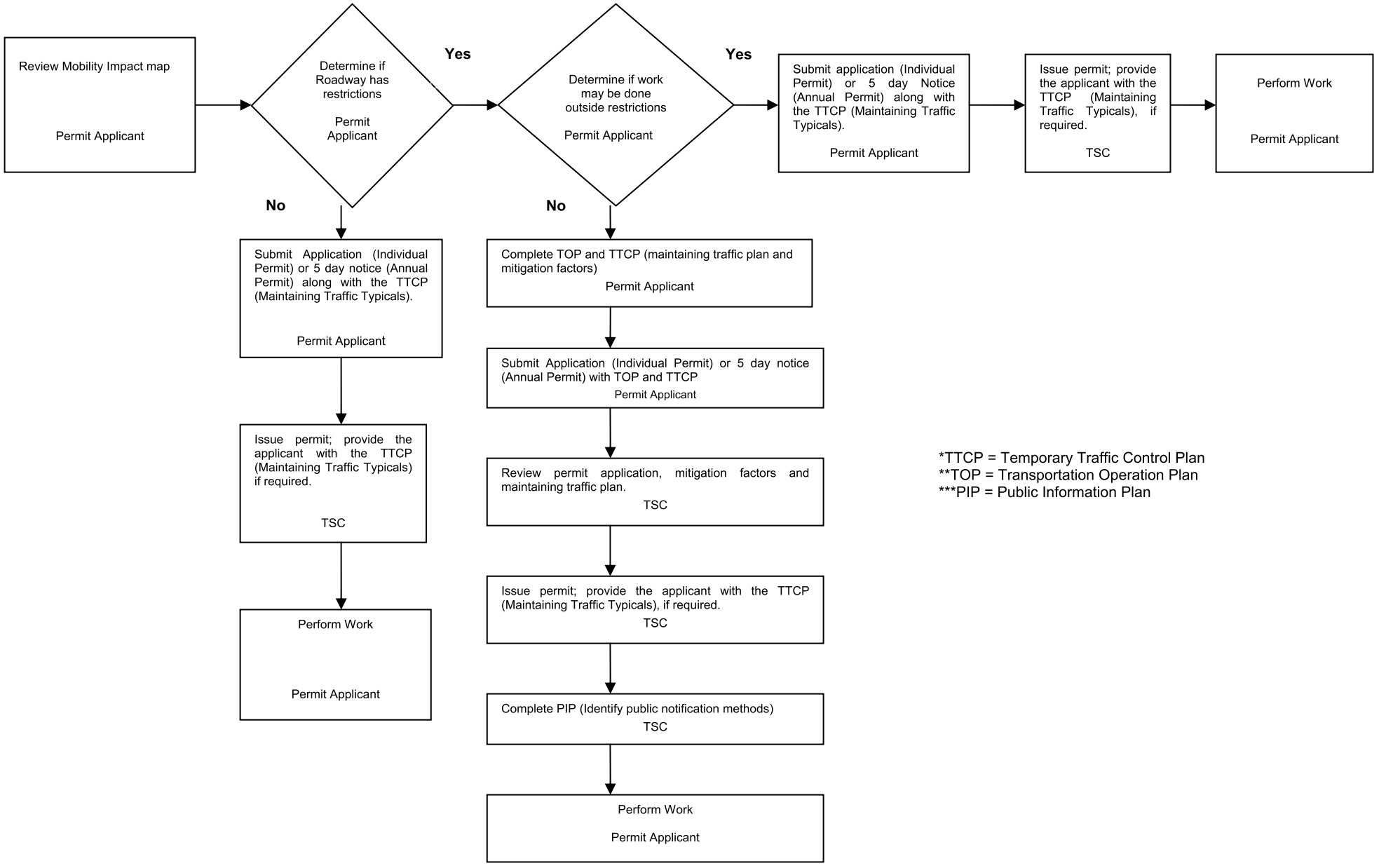

*TTCP = Temporary Traffic Control Plan
**TOP = Transportation Operation Plan
***PIP = Public Information Plan

Michigan Department
of Transportation
2486 (03/14)

ENVIRONMENTAL REQUIREMENTS FOR ACTIVITIES WITHIN MDOT RIGHT-OF-WAY

Issuance of a permit by MDOT does not relieve the permit applicant from meeting any and all requirements of law, or of other public bodies or agencies, including but not limited to the following:

1. Goemare-Anderson Wetland Protection Act, Part 303, P.A. 451 of 1994

   Any activity that involves excavation or fill, located within a regulated wetland, requires a Michigan Department of Environmental Quality (MDEQ) permit. Regulated wetlands are those systems that are contiguous to a lake or stream (within 500 feet) or greater than five (5) acres in size.

2. Inland Lakes and Streams Act, Part 301, P.A. 451 of 1994

   Any activity located within the ordinary high-water mark of a regulated body of water, i.e., lake, stream, drain, pond. etc., shall require a permit. There are no exemptions to this requirement. Permit applications and questions can be submitted to the MDEQ's Land and Water Management Division.

3. Soil Erosion and Sedimentation Control Act, Part 91, P.A. 451 1994

   Any land disturbance of one (1) acre or greater, or that is located within 500 feet of a lake or stream, requires a soil erosion permit. Municipalities who are classified as an Authorized Public Agency (APA) are exempt from permits, but must follow proper soil erosion practices as identified in their standard plan. Any construction activity located within MDOT Right-of-Way that is authorized by a MDOT permit is the responsibility of the permit applicant and is not covered under MDOT's APA authority.

   Soil erosion and sedimentation controls are required on all projects, even if a soil erosion permit is not required. Individuals performing work shall prevent sediment from entering any body of water or leaving the Right-of-Way. Permits can be obtained from the county/municipal agencies. Minor earth changes are exempted in this Act and are classified as normal maintenance and emergency repairs.

4. Clean Water Act: National Pollutant Discharge Elimination System (NPDES) Storm Water Discharge Requirements for Construction Activities

   Any land disturbance of five (5) acres or greater requires an NPDES Storm Water Discharge Permit. This can include any filling, excavating, grading, clearing, etc. Municipally-owned utilities who service a population of less than 100,000 are exempt from permit provisions, but not from environmental protection requirements. Permit applications require the Part 31, P.A. 451 permit number, or a declaration of APA status and the effective date. Permit applications and questions can be submitted to the MDEQ's Surface Water Quality Division.

5. Environmental Site Closures

   A procedure was developed by the MDEQ and MDOT which may allow a property owner, who is responsible for of these sites, to close an environmentally impacted site. Questions regarding this activity shall be addressed by contacting MDOT's Environmental Specialist at 517-335-2271.

6. The Land and Water Management Division of the MDEQ also administers the following environmental laws which may require review prior to construction:
   - Sand Dune Protection Act, Part 353, P.A. 451 of 1994.
   - Shore-lands Protection and Management, Part 323, P.A. 451 of 1994.
   - Great Lakes Submerged Lands Act, Part 325, and P.A. 451 of 1994.

7. The Wildlife Division of the MDNR also administers the following environmental laws which may require review prior to construction:
   - Endangered Species Act, Part 365, and P.A. 451 of 1994.

Questions regarding these permits may be addressed by contacting the nearest MDEQ district field office, or the MDEQ Land and Water Management Division at 517-373-1170.

Additional information is available in MDOT's Environmental Procedures Manual.

GENERAL CONDITIONS

(See new condition 23)

This permit is issued subject to the following conditions:

1. This permit grants to the permittee only those rights specifically stated and no other. Maintenance work within the trunkline right of way may require a separate permit unless authorized within the scope of the annual permit.

2. Issuance of this permit does not relieve permittee from meeting any and all requirements of law, or of other public bodies or agencies. The permittee shall be responsible for securing including but not limited to any other permissions including or required by law including but not limited to cities, villages, townships, corporations, or individuals for the activities hereby permitted.

3. The permittee agrees as a condition of this permit to:

   a. Have in the permittee's or the permittee's representative's possession on the job site at all times the approved permit, advanced notice and any necessary plans or sketches.

   b. Submit Advance Notice through the online Construction Permit System (CPS) at least five (5) working days prior to commencement of any operations covered by this permit. No work shall start until an approved Advance Notice is e-mailed to the permittee.

   c. Perform no work except emergency work, unless authorized by the Department, on Saturdays, Sundays, or from 3:00 p.m. on the day proceeding until the normal starting time the day after the following holidays: New Year's Day, Memorial Day, Independence Day, Labor Day, Thanksgiving Day and Christmas Day.

   d. Provide and maintain all necessary precautions to prevent injury or damage to persons and property from operations covered by this permit.

   e. Furnish, install and maintain all necessary traffic controls and protection during permittee's operations in accordance with the Michigan Manual of Uniform Traffic Control Devices and any supplemental specifications set forth herein.

   f. Notify the Department of completion of work authorized by this permit through CPS, so that final inspection may be made and surety deposit released (where applicable). Surety deposit will not be released until the work authorized by the permit has been completed and inspected, and all inspection charges billable to the permittee are paid.

4. Nothing in this permit shall be construed to grant any rights what so ever to any public utilities, except as to the consent herein specifically given, nor to impair any existing rights granted in accordance with the constitution or laws of this state.

5. Any operations in the trunkline right of way not covered by permit and the appropriate Department specifications are in violation of the jurisdictional authority of the Department, with respect to the control of the trunkline right of way, unless approved by the Department. Any change or alteration in the permit activities requires prior approval of the Department and may require a new permit.

6. Performance of the requirements of this permit is the responsibility of the permittee. The permittee shall complete all operations for which this permit is issued in accordance with the conditions of this permit, by the specified completion date. The permittee shall meet all requirements of the current Department Standard Specifications for Construction, and the Supplemental Specifications set forth on/or incorporated as a part of this permit.

7. The construction, operation and maintenance of the facility covered by this permit shall be performed without cost to the Department unless specified herein. The permittee shall be responsible for the cost of restoration of the state trunkline and right of way determined by the Department to be damaged as a result of the activities of the permittee.

8. Facilities allowed on state trunkline right of way shall be placed and maintained in a manner which will not impair the state trunkline or interfere with the reasonable safe and free flow of traffic. Failure of the permittee to maintain the facilities located within the State trunkline right of way so as not to interfere with the operation, maintenance or use of the state trunkline by the traveling public may result in revocation of the permit.

9. The permittee is solely and fully responsible for all activities undertaken pursuant to the permit. Any and all actions by the Department and those governmental bodies performing permit activities for the Department pursuant to a maintenance contract, including but not limited to any approved reviews and inspections of any nature, permit issuing, and final acceptance or rejection of the work or activity authorized by the permit shall not be construed as a warranty or assumption of liability on the part of the Department or those governmental bodies. It is expressly understood and agreed that any such actions are for the sole and exclusive purposes of the Department and the governmental bodies acting in a governmental capacity. Any such actions by the Department and governmental bodies will not relieve the permittee of its obligations hereunder, nor are such actions by the Department and the governmental bodies to be construed as a warranty as to the propriety of the permittee's performance. The permittee shall indemnify and save harmless the State of Michigan, Michigan Transportation Commission, the Department and all officers, agents and employees thereof, and those governmental bodies performing permit activities for the Department and all officers, agents and employees thereof, pursuant to a maintenance contract, against any and all claims for damages arising from operations covered by this permit except claims resulting from the sole negligence or willful acts or omissions of said indemnities, its agent, or employees. In addition, permittee upon request shall furnish proof of insurance coverage for the term of this permit in an amount pre-specified.

10. The permittee or representative must ensure that all insurance policies and binders include an endorsement by which the insurer agrees to notify the Department in writing at least 30 days before there is a cancellation or material change in coverage. The permittee or representative must stop operations if any insurance is cancelled or reduced, and must not resume operations until new insurance is in force. The State of Michigan, Michigan Transportation Commission, Department of Transportation, and governmental bodies performing permit activities under a maintenance contract, and all officers, agents, and employees of all the above, for claims arising out of, under, or by reason of operations covered by the permits issued to the permittee.

11. This permit is not assignable and not transferable unless specifically agreed to by the Department.

12. The permittee, upon request of the Department, shall immediately remove, cease operations, and surrender this permit, or alter or relocate, at the permittee's own expense, the facility for which this permit is granted. Upon failure to do so, the Department may take any necessary action to protect the trunkline interest and the permittee shall reimburse the Department for its costs in doing same. The permittee expressly waives any right to claim damages or compensation in the event this permit is revoked.

13. The permittee shall, upon request by the Department, furnish a performance surety deposit in the form of a bond, cash, certified check, or (when authorized by the Department) an irrevocable letter of credit in such amount as deemed necessary by the Department to guarantee restoration of the trunkline highway or performance under the conditions of the permit.

14. The permittee hereby acknowledges and agrees that the Department has the right to demand completion by the permittee, or the performance surety, or to complete any uncompleted activity authorized by this permit which adversely affects the operation and/or maintenance of the state trunkline highway, or which is not completed by the expiration date of the permit, including:

    a. Completion of construction of driveway and/or approach (not authorized by annual permit).
    b. Removal of materials.
    c. Restoration of the trunkline facilities and right of way as necessary for the reasonably safe and efficient operations of the trunkline highway.

    The permittee further agrees to immediately reimburse the Department in full for all such costs incurred by the Department upon receipt of billing, and that upon failure to pay, the Department may affect payment with the performance surety deposit. Should the surety deposit be insufficient to cover expenses incurred by the Department, the permittee shall pay such deficiency upon billing by the Department. If the surety deposit exceeds the expense incurred by the Department, any excess will be returned or released to the depositor upon completion of the work to the satisfaction of the Department.

15. The Department reserves the right during the time any or all of the work is being performed to assign an inspector to protect the trunkline interest, and to charge the permittee all such costs incurred. In addition, the permittee may be billed any engineering and review fees incurred by the Department or its agent in connection with the work covered by this permit.

16. Emergency Operations: In time of disaster or emergency, or when utility lines or facilities are so damaged as to constitute a danger to life and/or property of the public, access to the same may be had by the most expeditious route. Work is to be completed in a manner which will provide the traveling public with maximum possible safety and minimize traffic distribution. Notice of such situations shall be given to the nearest police authority and the department as soon as can reasonably be done under the circumstances. During normal Department work hours, the facility owner shall advise the Department of any operations within right of way which affect traffic operations or the highway structure or facilities prior to performance of the work. After normal Department work hours, the permittee, at the beginning of the first working day after the emergency operation, shall advise the Department of any operations which affect traffic operations or the highway structures and facilities. If determined necessary by the Department, the permittee shall secure an individual permit for such work after notification.

17. Upon the Department's request, as built drawings of work performed will be furnished to the Department within 30 days after completion of the work.

18. The permittee shall give notice to public utilities in accordance with Act 174 of 2013, as amended, and comply with all applicable requirements of this act. The permittee shall also comply with requirements of Act 451, P.A. of 1994, as amended.

19. The permittee acknowledges that the Department is without liability for the presence of the permittee's facility which is located within the trunkline right of way. Acceptance by the Department of work performed, and/or notice of termination of performance obligations for the surety and/or the permittee do not relieve the permittee of full responsibility for the permittee's work or for the presence of the permittee's facility in the trunkline right of way.

20. Where the Department has accepted an Indemnification Commitment in lieu of bond and/or insurance policies, such commitment is incorporated into this permit by reference.

21. It is illegal to discharge substances other than storm water into the Department's storm sewer system unless permission has been obtained in writing for other discharges.

22. The permittee shall be responsible for obtaining information on permitted environmental site closures within MDOT right of way. MDOT has implemented a program that allows environmental contamination to remain within the right of way by use of a permit. Issued permit information can be obtained from the Region/TSC in which the permit is issued. If the permittee will encounter a site area identified as a site closure permit area, the permittee shall follow instructions and conditions set forth in Supplemental Specifications #3 and specifications found in form 2205-C, "Special Conditions for Underground Construction".

    >>>NEW>>>

23. Other than for normal daily vehicle and equipment usage requirements, the permittee shall not use or store unattended equipment, or the following types of hazardous materials on, over, under, or immediately adjacent to Department or Local Agency owned buildings, bridges and structures, unless expressly approved by the Department in writing;

    Explosive, flammable gas, non-flammable gas, inhalation hazard, oxygen, flammable liquids, fuel oil, combustible, gasoline, flammable solids, spontaneously combustible, dangerous-when-wet, oxidizer organic peroxide, toxic, poisonous, inhalation hazard, infectious, radioactive, corrosive, or any other potentially hazardous material.

    Furthermore, the permittee shall not allow hazardous or unreasonably objectionable smoke, fumes, vapor, or odors to emit from any permitted operation. No junk, garbage, refuse or unused construction materials shall be stored or accumulated within the MDOT Right-of-Way.

1. Construction and Maintenance of Facilities – To construct and maintain utility crossings of limited access highways, access for the utility's service vehicles may be from county roads, service roads, and openings authorized in limited access right of way fences. The construction of utilities across limited access highways should be for the purpose of serving a general area rather than providing individual services, unless extenuating circumstances necessitate such crossings.

   Equipment, vehicles or personnel will not operate within a distance of 30 feet from the edge of the pavement of roadways or ramps on limited access highways. At locations where utilities have been constructed in medians having a width greater than 80 feet or have otherwise been allowed to remain or to be constructed in limited access right of way, ingress and egress shall be by such routes as specified by the Department, which may also specify additional safety provisions.

2. Restoration- Restoration of the trunkline highway and right of way will be such that it will provide a condition equal to or better than the original condition, in accordance with Michigan Department of Transportation Standard Specifications.

3. Excavation and Disposal of Excavated Material – The permittee shall provide and place the necessary sheeting, shoring and bracing required to prevent caving, loss or settlement of foundation material supporting the pavement, or any other highway installation such as sewers, culverts, etc. The permittee shall assume the full responsibility for this protection and shall not proceed in these areas before approval of the methods by the Department.

   Construction equipment and excavating material shall not be stocked in such locations that it creates a traffic hazard or interferes with the flow of traffic; and on limited access highways, shall be a minimum of 30 feet from the traveled way. Sod and topsoil shall be stacked separately from other excavated material. The permittee shall dispose of all surplus and unsuitable material outside of the limits of the highway, unless the permit provides for disposal at approved locations within right of way. In the latter case, the material shall be leveled and trimmed in an approved manner.

   When the permittee is excavating within trunkline right of way and discovers existing contaminated soil and/or an abandoned underground storage tank, special permit specifications entitled "Special Conditions for Underground Construction" (Form 2205-C) shall apply.

4. Utility Cuts, Trenches and Pavement Replacement – Utility crossing by pavement cutting and removal are generally prohibited. If extenuating circumstances make tunneling, boring and jacking impractical pavement cutting may be used with approval of the Department. All utility cuts, trenching and pavement replacement shall comply with the requirements of the Standard Specifications and the Standard Plan "Utility Cuts, Trenches and Pavement Replacement". Unless otherwise specified, cuts in concrete residential and commercial drives shall be as above; except that the patch width shall be a minimum of 3 feet and the remaining slab from patch to existing joint shall be a minimum of 3 feet. Backfill shall be made with sand-gravel as specified in the Standard Specifications, unless otherwise directed. After the backfill has been placed and compacted by controlled density method, the pavement shall be replaced with new pavement of the original type and quality, unless at the season of the year when it is not feasible to replace pavement in kind. In this case, a temporary surface of bituminous material shall be placed with Department approval and later replaced with pavement of the original type at the applicant's expense. Other pavement types may be allowed with prior approval of the Department.

5. Crossing Roadbed by Tunneling or Boring and Jacking – All crossing of roadbed operations involving tunneling, boring and jacking shall comply with the Department's special provisions for such work.

6. Backfilling and Compacting Backfill – Unless otherwise specified, all trenches, holes and pits shall be filled with sound earth or with sand-gravel if so provided, placed in successive layers not more than 9 inches in depth, loose measure, and each layer shall be thoroughly compacted by tamping. All backfill compaction will be subject to check by the controlled density method.

7. Depth of Cover Method- Unless otherwise authorized, pipes shall be placed to a depth that will provide not less than 4 feet of cover between the top of the roadway surface and the pipe, 3 feet cover below the ditch line and the pipe.

8. Trees:

   a. The permittee is responsible for obtaining permission from abutting owners when trimming or removing trees on easement right of way.
   b. Tree removal or trimming may be undertaken only after submission of an "Advance Notice" through CPS, a field review by the Region Resource Specialist and an approved copy of the advanced notice is e-mailed to the permittee.
   c. Limbs, logs, stumps and litter shall be disposed of in a manner acceptable to the Department.
   d. Tree roots shall be bored a distance of one foot for each one inch of trunk diameter for underground utility installations

9. Aerial Wire Crossings – Vertical clearance of wires, conductors and cables over state trunkline shall not be less than required by Section 232 of the National Electrical Safety Code, except in no case shall the under-clearance below any wire, conductor, or cable, under any temperature or loading condition, be less than eighteen feet (18').

PERFORMANCE RESOLUTION FOR GOVERNMENTAL AGENCIES

Received
JAN 04 2017
MDOT
ISHPEMING TSC

This Performance Resolution is required by the Michigan Department of Transportation for purposes of issuing to a municipal utility an "Individual Permit for Use of State Highway Right of Way", or an "Annual Application and Permit for Miscellaneous Operations Within State Highway Right of Way".

RESOLVED WHEREAS, the CITY OF HANCOCK
(city, village, township, etc.)

hereinafter referred to as the "GOVERNMENTAL AGENCY," periodically applies to the Michigan Department of Transportation, hereinafter referred to as the "DEPARTMENT," for permits, referred to as "PERMIT," to construct, operate, use and/or maintain utilities or other facilities, or to conduct other activities, on, over, and under State Highway Right of Way at various locations within and adjacent to its corporate limits;

NOW THEREFORE, in consideration of the DEPARTMENT granting such PERMIT, the GOVERNMENTAL AGENCY agrees that:

1. Each party to this Agreement shall remain responsible for any claims arising out of their own acts and/or omissions during the performance of this Agreement, as provided by law. This Agreement is not intended to increase either party's liability for, or immunity from, tort claims, nor shall it be interpreted, as giving either party hereto a right of indemnification, either by Agreement or at law, for claims arising out of the performance of this Agreement.

2. If any of the work performed for the GOVERNMENTAL AGENCY is performed by a contractor, the GOVERNMENTAL AGENCY shall require its contractor to hold harmless, indemnify and defend in litigation, the State of Michigan, the DEPARTMENT and their agents and employee's, against any claims for damages to public or private property and for injuries to person arising out of the performance of the work, except for claims that result from the sole negligence or willful acts of the DEPARTMENT, until the contractor achieves final acceptance of the GOVERNMENTAL AGENCY. Failure of the GOVERNMENTAL AGENCY to require its contractor to indemnify the DEPARTMENT, as set forth above, shall be considered a breach of its duties to the DEPARTMENT.

3. Any work performed for the GOVERNMENTAL AGENCY by a contractor or subcontractor will be solely as a contractor for the GOVERNMENTAL AGENCY and not as a contractor or agent of the DEPARTMENT. The DEPARTMENT shall not be subject to any obligations or liabilities by vendors and contractors of the GOVERNMENTAL AGENCY, or their subcontractors or any other person not a party to the PERMIT without the DEPARTMENT'S specific prior written consent and notwithstanding the issuance of the PERMIT. Any claims by any contractor or subcontractor will be the sole responsibility of the GOVERNMENTAL AGENCY.

4. The GOVERNMENTAL AGENCY shall take no unlawful action or conduct, which arises either directly or indirectly out of its obligations, responsibilities, and duties under the PERMIT which results in claims being asserted against or judgment being imposed against the State of Michigan, the Michigan Transportation Commission, the DEPARTMENT, and all officers, agents and employees thereof and those contracting governmental bodies performing permit activities for the DEPARTMENT and all officers, agents, and employees thereof, pursuant to a maintenance contract. In the event that the same occurs, for the purposes of the PERMIT, it will be considered as a breach of the PERMIT thereby giving the State of Michigan, the DEPARTMENT, and/or the Michigan Transportation Commission a right to seek and obtain any necessary relief or remedy, including, but not by way of limitation, a judgment for money damages.

5. The GOVERNMENTAL AGENCY will, by its own volition and/or request by the DEPARTMENT, promptly restore and/or correct physical or operating damages to any State Highway Right of Way resulting from the installation construction, operation and/or maintenance of the GOVERNMENTAL AGENCY'S facilities according to a PERMIT issued by the DEPARTMENT.

6. With respect to any activities authorized by a PERMIT, when the GOVERNMENTAL AGENCY requires insurance on its own or its contractor's behalf it shall also require that such policy include as named insured the State of Michigan, the Transportation Commission, the DEPARTMENT, and all officers, agents, and employees thereof and those governmental bodies performing permit activities for the DEPARTMENT and all officers, agents, and employees thereof, pursuant to a maintenance contract.

7. The incorporation by the DEPARTMENT of this resolution as part of a PERMIT does not prevent he DEPARTMENT from requiring additional performance security or insurance before issuance of a PERMIT.

8. This resolution shall continue in force from this date until cancelled by the GOVERNMENTAL AGENCY or the DEPARTMENT with no less than thirty (30) days prior written notice provided to the other party. It will not be cancelled or otherwise terminated by the GOVERNMENTAL AGENCY with regard to any PERMIT which has already been issued or activity which has already been undertaken.

BE IT FURTHER RESOLVED, that the following position(s) are authorized to apply to the DEPARTMENT for the necessary permit to work within State Highway Right of Way on behalf of the GOVERNMENTAL AGENCY.

Title and/or Name:

DPW DIRECTOR

CITY CLERK

CITY MANAGER

I HEREBY CERTIFY that the foregoing is a true copy of a resolution adopted by

the CITY COUNCIL
(Name of Board, etc)

of the CITY OF HANCOCK of HOUGHTON
(Name of GOVERNMENTAL AGENCY) (County)

at a REGULAR meeting held on the 21 day

of DECEMBER A.D. 2016.

Signed Beth Fredians Oli Title DEPUTY CLERK

Lisa McKenzie

System Operations Advisory

SOA 2016-002
May 1, 2016
Revised: 9/30/2016

From Mark Geib, Engineer of Operations Field Services Division

MDOT
Division of Operations
6333 Lansing Road
Lansing, MI 48917
Fax/517-322-3385

Questions regarding this advisory should be directed to:

Chris Brookes
Work Zone Delivery Engineer
(517) 636 -0300
Brookesc@michigan.gov

Or

Chuck Bergmann
Work Zone Tech Specialist
(517)322-3314
Bergmannc@michigan.gov

Fluorescent Sheeting Implementation

The Michigan Department of Transportation (MDOT) has been working with Michigan Infrastructure and Transportation Association (MITA) and its industry partners on the use of a 6-inch wide angle prismatic lens reflective sheeting for reflectorizing reboundable traffic control devices such as drums and 42-inch channelizing devices. MDOT, MITA, and industry partners piloted a number of successful projects over the last two years and have been working jointly to develop an implementation plan. Safety for both the motoring public and the workers is the number one reason for this change. Fluorescent reflective sheeting can increase distance visibility providing up to 2.5 seconds of additional driver reaction time at 55 MPH, compared with high intensity sheeting. Additionally, during weather events and low light conditions when approximately 35 percent of work zone crashes occur historically in Michigan, improved motorist visibility will reduce the potential of a traffic crash or fatality. This is a safety initiative that will help reach MDOT's goal of "Towards Zero Deaths".

Specification will be according to ASTM D 4956. The fluorescent orange sheeting color must have a daytime luminance factor that meets or exceeds 20, (ASTM D 4956 Table 2 – Daytime Luminance Factor (Y %), and the fluorescent orange and white sheeting classified as Type IV sheeting. For projects incorporating the new sheeting the following pay items will be used:

- "Plastic Drum, Fluorescent, Furn"
- "Plastic Drum, Fluorescent, Oper"
- "Channelizing Device, 42 Inch, Fluorescent, Furn"
- "Channelizing Device, 42 Inch, Fluorescent, Oper"

The following implementation plan was based on the average service life of the drums and 42-inch channelizing devices, which will allow industry to upgrade during the normal replacement cycle. The schedule detailed below, provides inclusion beginning with October 2017 project lettings on the interstate system.

The phase in period is described below for project letting dates:

- Official notification to industry of the upcoming phase in period was provided on 4/7/2016.
- Project lettings on or after 10/1/2017 – Type IV Fluorescent Orange and Type IV White required on all “I” routes.
- Project lettings on or after 10/1/2018 – Type IV Fluorescent Orange and Type IV White required on all “BR”, “US”, and “M” routes.
- Project lettings on or after 10/1/2020 – Type IV Fluorescent Orange and Type IV White required on all projects let through MDOT including local agency projects.
- Maintenance, utility, and permit work performed on state trunk line on or after 10/1/2020 will require – Type IV Fluorescent Orange and Type IV White.
- Selected projects may require the use of the new sheeting on a project-by-project basis after the Frequently Used Special Provision is released for each cycle

Contractors may implement new fluorescent sheeting on drums and 42 inch channelizing devices prior to the above specific dates, as an “equal to or better than” substitution, at no additional cost to MDOT.

During the phase in period, the intermixing of drums and 42 inch channelizing devices with fluorescent orange sheeting and high intensity standard orange sheeting, on the same project will not be allowed.

Intermixing of drums and 42 inch channelizing devices with fluorescent sheeting from different companies of the same grade will be allowed.

Please contact the Work Zone Delivery Engineer for any additional guidance.

Construction Advisory

CA 2013-03
May 1, 2013

From Brenda O'Brien, Engineer of Construction Field Services

MDOT-Construction Field Services Division
P.O. Box 30049
Lansing, Michigan 48909
Phone/517-322-1087
Fax/517-322-5664
www.michigan.gov/mdot/

Index: Environment

Questions regarding this Construction Advisory should be directed to:

Jason Gutting, Engineer of Construction Operations at 517-636-6334 or guttingj@michigan.gov

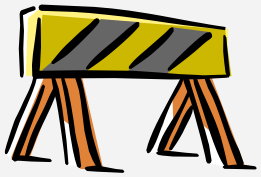

BJO:JG

Historical and Archaeological Discoveries During Construction Operations

This construction advisory applies to all construction, maintenance, permits, and utility projects on MDOT right-of-way.

In the event that any staff (MDOT, consultant, local agency, contractor, etc.) encounter bones, artifacts, or buried features of possible historical or archaeological significance during construction operations on MDOT right-of-way, they must immediately cease operations in that location and notify the MDOT TSC construction engineer.

The MDOT TSC construction engineer must, immediately upon stopping work in the affected area, contact the MDOT archaeologist for consultation and direction. Communications are to be directed to the following individuals.

Primary Contact:
James A. Robertson, Ph.D.
MDOT Archaeologist
517-335-2637 (office)
Robertsonj3@michigan.gov

Secondary Contact (if primary is not available):
Christine N. Stephenson, M.A.
Staff Archaeologist
517-243-2818 (cell)
Stephensonc@michigan.gov

If bones are discovered and there is no reasonable doubt that they are human bones, the MDOT TSC construction engineer must immediately also contact the local law enforcement agency.

It should be noted that per Michigan law, any person who willfully digs up, disinters, or moves human remains from their place of burial, or who aids in such activities without being lawfully authorized to do so can be found guilty of a felony punishable by up to 10 years in prison and a fine of up to $5,000.

Construction Field Services is working with the Environmental Services Section to develop a Bureau of Highway Instructional Memorandum with additional details.

Please share this construction advisory with consultants, local agencies, maintenance supervisors/coordinators, and permit/utility staff in your area as well as TSC staff.

SIGN LEGEND

NO	SIGN	SIGN DESIGNATION	SIZE	NUMBER REQUIRED (FOR INFORMATION ONLY)	AREA (SQ. FT)
1	ROAD WORK AHEAD	W20-1	48"x48"	7	112
2	TEZCUCO	W16-8A	12"x24"	6	12
3		TYPE III* BARRICADE	8'	16	
4	SEQUENCE M0730a				168
5	DETOUR	M4-9(R)	30"x24"	2	10
6	DETOUR	M4-9(S)	30"x36"	2	15
7	DETOUR AHEAD	W20-2	48"x48"	1	16
8	END DETOUR	M4-8a	18"x24"	1	3

QUANTITIES THIS SHEET

TOTAL	UNIT	DESCRIPTION
16	Ea	Barricade, Type III, High Intensity, Double Sided, Lighted, Furn
16	Ea	Barricade, Type III, High Intensity, Double Sided, Lighted, Oper
2	Ea	Pedestrian Type II Barricade, Temp
1	Ea	Lighted Arrow, Type C, Furn
1	Ea	Lighted Arrow, Type C, Oper
1	LSUM	Minor Traf Devices
25	Ea	Plastic Drum, High Intensity, Lighted, Furn
25	Ea	Plastic Drum, High Intensity, Lighted, Oper
324	Sft	Sign, Type B, Temp, Prismatic, Furn
324	Sft	Sign, Type B, Temp, Prismatic, Oper
12	Sft	Sign, Type B, Temp, Prismatic, Spec, Furn
12	Sft	Sign, Type B, Temp, Prismatic, Spec, Oper

TRAFFIC NOTES:

1. DISTANCES SHOWN ARE APPROXIMATE AND SHALL BE ADJUSTED IN THE FIELD BY THE CONTRACTOR AS DIRECTED BY THE ENGINEER TO AVOID CONFLICT OR OBSTRUCTION BY EXISTING TREES, SIGNS, DRIVEWAYS ETC, PRESENT IN THE FIELD BUT NOT SHOWN ON THE PLANS.
2. ALL CONSTRUCTION SIGNS SHALL CONFORM WITH THE CURRENT EDITION OF THE MICHIGAN MANUAL OF UNIFORM TRAFFIC CONTROL DEVICES.
3. ALL TRAFFIC CONTROL DEVICES ARE THE RESPONSIBILITY OF THE CONTRACTOR.
4. TRAFFIC CONTROL DEVICES ARE TO BE MAINTAINED BY THE CONTRACTOR FOR THE DURATION OF THE PROJECT. NIGHT PATROLS OF THE CONSTRUCTION AREA AND DETOUR ROUTE SHALL BE CONDUCTED BY THE CONTRACTOR AND WILL NOT BE PAID SEPARATELY, BUT WILL BE INCLUDED IN THE UNIT PRICE BID FOR TEMPORARY TRAFFIC CONTROL ITEMS.
5. ALL SIGNS SHALL BE RETRO-REFLECTIVE WITH A MATERIAL THAT HAS A SMOOTH, SEALED OUTER SURFACE.
6. ALL SPECIAL SIGNS SHALL BE PLACED ONE (1) WEEK PRIOR TO CONSTRUCTION.

DRAWING PATH: P:\7000_7100\7030180030_Hancock2018StormDamage\Drawings\WO #8\Civil\Misc\180030TRAF_WO#8.dwg Mar 08, 2021 - 1:42pm

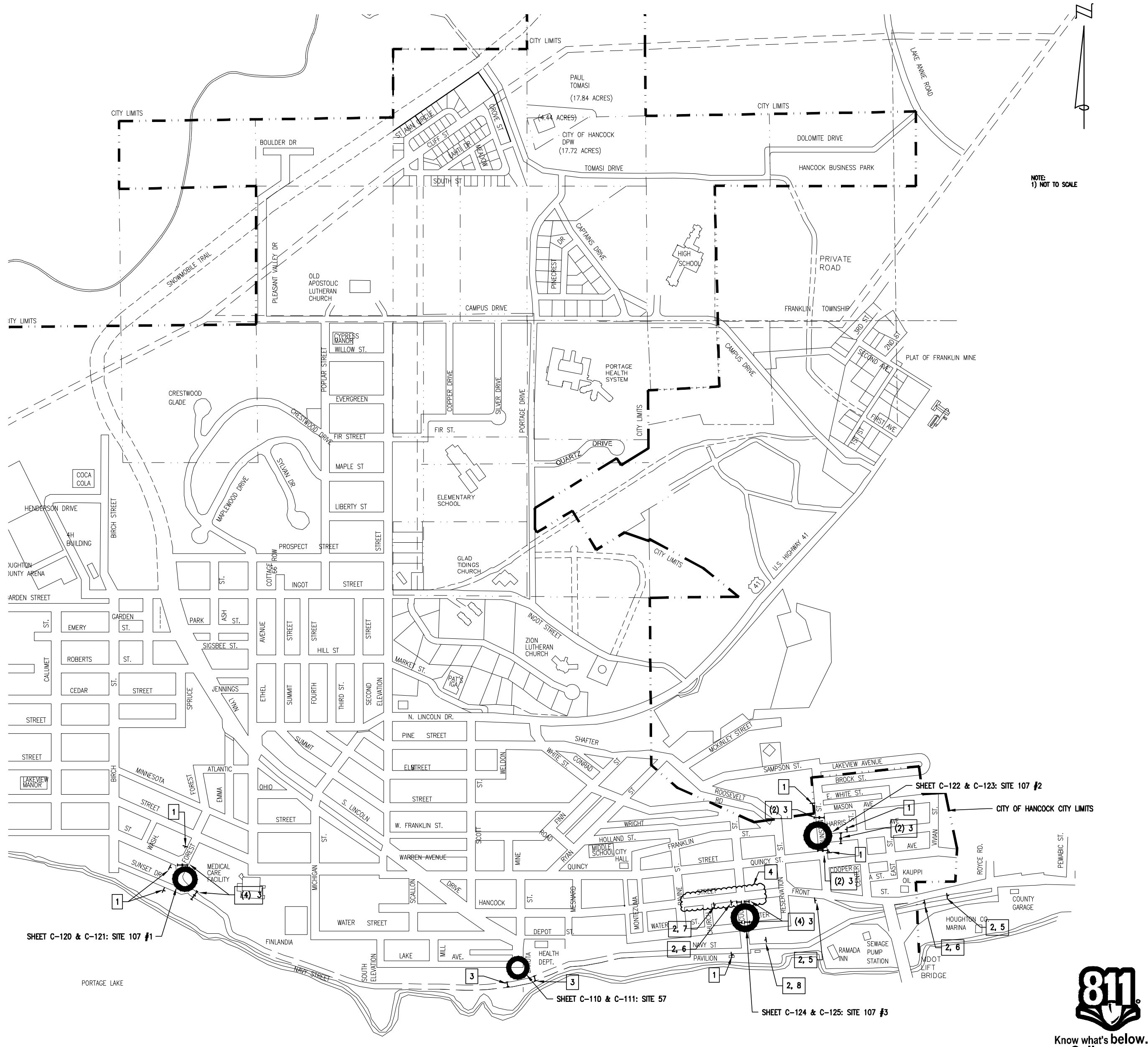

Know what's **below.**
Call before you dig.

OHM
ARCHITECTS ENGINEERS PLANNERS
424 Hancock St
Hancock, MI 49930
P (906) 482-0535 | F (906) 482-6453
OHM-ADVISORS.COM

DATE	PROJ NUMBER	ENG/ARCH	PROJ MGR	CADD	COUNTY	MUNICIPALITY
03/15/2021	7030-18-0030	EM	MM	TR	HOUGHTON	CITY OF HANCOCK

ISSUE: --
REVISIONS:

CITY OF HANCOCK
STORM SEWER REPAIRS PHASE II
TRAFFIC CONTROL - STORM SEWER REPAIR
FEMA PROJECT NO. 64226

SHEET
C-004

COPYRIGHT 2019 OHM ALL DRAWINGS AND WRITTEN MATERIALS APPEARING HEREIN CONSTITUTE THE ORIGINAL AND UNPUBLISHED WORK OF OHM AND THE SAME MAY NOT BE DUPLICATED, DISTRIBUTED, OR DISCLOSED WITHOUT PRIOR WRITTEN CONSENT OF OHM

MINIMUM MERGING TAPER LENGTH "L" (FEET)

OFFSET	POSTED SPEED LIMIT, MPH (PRIOR TO WORK AREA)										
FEET	25	30	35	40	45	50	55	60	65	70	
1	10	15	20	27	45	50	55	60	65	70	TAPER LENGTH "L" IN FEET
2	21	30	41	53	90	100	110	120	130	140	
3	31	45	61	80	135	150	165	180	195	210	
4	42	60	82	107	180	200	220	240	260	280	
5	52	75	102	133	225	250	275	300	325	350	
6	63	90	123	160	270	300	330	360	390	420	
7	73	105	143	187	315	350	385	420	455	490	
8	83	120	163	213	360	400	440	480	520	560	
9	94	135	184	240	405	450	495	540	585	630	
10	104	150	204	267	450	500	550	600	650	700	
11	115	165	225	293	495	550	605	660	715	770	
12	125	180	245	320	540	600	660	720	780	840	
13	135	195	266	347	585	650	715	780	845	910	
14	146	210	286	374	630	700	770	840	910	980	
15	157	225	307	400	675	750	825	900	975	1050	

THE FORMULAS FOR THE MINIMUM LENGTH OF A MERGING TAPER IN DERIVING THE "L" VALUES SHOWN IN THE ABOVE TABLES ARE AS FOLLOWS:

$$"L" = \frac{W \times S^2}{60}$$ WHERE POSTED SPEED PRIOR TO THE WORK AREA IS 40 MPH OR LESS

"L" = S x W WHERE POSTED SPEED PRIOR TO THE WORK AREA IS 45 MPH OR GREATER

L = MINIMUM LENGTH OF MERGING TAPER
S = POSTED SPEED LIMIT IN MPH PRIOR TO WORK AREA
W = WIDTH OF OFFSET

TYPES OF TAPERS	TAPER LENGTH
UPSTREAM TAPERS	
MERGING TAPER	L - MINIMUM
SHIFTING TAPER	1/2 L - MINIMUM
SHOULDER TAPER	1/3 L - MINIMUM
TWO-WAY TRAFFIC TAPER	100 ' - MAXIMUM
DOWNSTREAM TAPERS (USE IS OPTIONAL)	100 ' - MINIMUM (PER LANE)

MDOT Michigan Department of Transportation
TRAFFIC AND SAFETY
MAINTAINING TRAFFIC TYPICAL

TABLES FOR "L", "D" AND "B" VALUES

DRAWN BY: CON:AE:djf	JUNE 2006 PLAN DATE:	M0020a	SHEET 1 OF 2
CHECKED BY: BMM			
FILE: K:/DGN/TSR/STDS/ENGLISH/MNTTRF/M0020a.dgn	REV. 08/21/2006		

DISTANCE BETWEEN TRAFFIC CONTROL DEVICES "D" AND LENGTH OF LONGITUDINAL BUFFER SPACE ON "WHERE WORKERS PRESENT" SEQUENCES

"D" DISTANCES	POSTED SPEED LIMIT, MPH (PRIOR TO WORK AREA)									
	25	30	35	40	45	50	55	60	65	70
D (FEET)	250	300	350	400	450	500	550	600	650	700

GUIDELINES FOR LENGTH OF LONGITUDINAL BUFFER SPACE "B"

SPEED* MPH	LENGTH FEET
20	33
25	50
30	83
35	132
40	181
45	230
50	279
55	329
60	411
65	476
70	542

* POSTED SPEED, OFF PEAK 85TH PERCENTILE SPEED PRIOR TO WORK STARTING, OR THE ANTICIPATED OPERATING SPEED

1 BASED UPON AMERICAN ASSOCIATION OF STATE HIGHWAY AND TRANSPORTATION OFFICIALS (AASHTO) BRAKING DISTANCE PORTION OF STOPPING SIGHT DISTANCE FOR WET AND LEVEL PAVEMENTS (A POLICY ON GEOMETRIC DESIGN OF HIGHWAY AND STREETS), AASHTO. THIS AASHTO DOCUMENT ALSO RECOMMENDS ADJUSTMENTS FOR THE EFFECT OF GRADE ON STOPPING AND VARIATION FOR TRUCKS.

MDOT Michigan Department of Transportation
TRAFFIC AND SAFETY
MAINTAINING TRAFFIC TYPICAL

TABLES FOR "L", "D" AND "B" VALUES

DRAWN BY: CON:AE:djf	JUNE 2006	M0020a	SHEET 2 OF 2
CHECKED BY: BMM	PLAN DATE:		
FILE: K:/DGN/TSR/STDS/ENGLISH/MNTTRF/M0020a.dgn	REV. 08/21/2006		

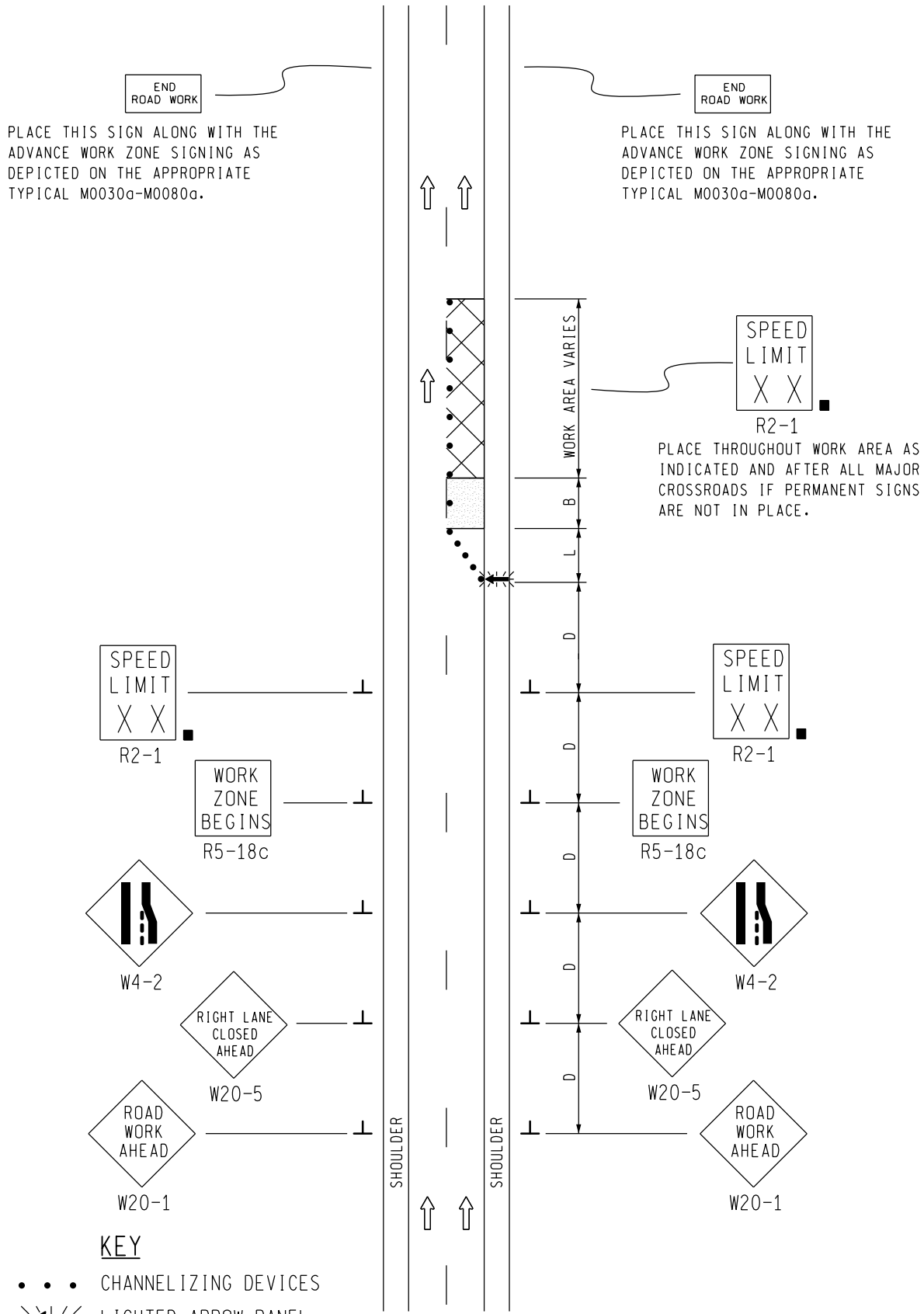

KEY

- • • • CHANNELIZING DEVICES
- LIGHTED ARROW PANEL
- ⇨ TRAFFIC FLOW
- ■ REFLECTS EXISTING SPEED LIMIT

SIGN = 168 ft2 - TYPE B
PLUS ADDITIONAL R2-1's
THROUGHOUT WORK AREA

NOT TO SCALE

MDOT Michigan Department of Transportation
TRAFFIC AND SAFETY
MAINTAINING TRAFFIC TYPICAL

TYPICAL TEMPORARY TRAFFIC CONTROL FOR A ONE-LANE CLOSURE ON A DIVIDED ROADWAY, NO SPEED REDUCTION

DRAWN BY: CON:AE:djf	OCTOBER 2011	M0730a	SHEET 1 OF 2
CHECKED BY: BMM:CRB	PLAN DATE:		

FILE: 341 RD/TS/Typicals/Signs/MT NON FWY/M0730a.dgn REV. 10/26/2011

NOTES

1B. D = DISTANCE BETWEEN TRAFFIC CONTROL DEVICES
L = MINIMUM LENGTH OF TAPER
B = LENGTH OF LONGITUDINAL BUFFER
SEE M0020a FOR "D," "L," AND "B" VALUES

2. ALL NON-APPLICABLE SIGNING WITHIN THE CIA SHALL BE MODIFIED TO FIT CONDITIONS, COVERED OR REMOVED.

3. DISTANCES BETWEEN SIGNS, THE VALUES FOR WHICH ARE SHOWN IN TABLE D, ARE APPROXIMATE AND MAY NEED ADJUSTING AS DIRECTED BY THE ENGINEER.

3A. THE "WORK ZONE BEGINS" (R5-18c) SIGN SHALL BE USED ONLY IN THE INITIAL SIGNING SEQUENCE IN THE WORK ZONE. SUBSEQUENT SEQUENCES IN THE SAME WORK ZONE SHALL OMIT THIS SIGN AND THE QUANTITIES SHALL BE ADJUSTED APPROPRIATELY.

4E. THE MAXIMUM RECOMMENDED DISTANCE(S) BETWEEN CHANNELIZING DEVICES SHOULD BE EQUAL IN FEET TO THE POSTED SPEED IN MILES PER HOUR ON TAPER(S) AND TWICE THE POSTED SPEED IN THE PARALLEL AREA(S).

5. FOR OVERNIGHT CLOSURES, TYPE III BARRICADES SHALL BE LIGHTED.

6. WHEN CALLED FOR IN THE FHWA ACCEPTANCE LETTER FOR THE SIGN SYSTEM SELECTED, THE TYPE A WARNING FLASHER, SHOWN ON THE WARNING SIGNS, SHALL BE POSITIONED ON THE SIDE OF THE SIGN NEAREST THE ROADWAY.

7. ALL TEMPORARY SIGNS, TYPE III BARRICADES, THEIR SUPPORT SYSTEMS AND LIGHTING REQUIREMENTS SHALL MEET NCHRP 350 CRASHWORTHLY REQUIREMENTS STIPULATED IN THE CURRENT EDITION OF THE MICHIGAN MANUAL ON UNIFORM TRAFFIC CONTROL DEVICES, THE CURRENT EDITION OF THE STANDARD SPECIFICATIONS FOR CONSTRUCTION, THE STANDARD PLANS AND APPLICABLE SPECIAL PROVISIONS. ONLY DESIGNS AND MATERIALS APPROVED BY MDOT WILL BE ALLOWED.

8. WHEN BUFFER AREAS ARE ESTABLISHED, THERE SHALL BE NO EQUIPMENT OR MATERIALS STORED OR WORK CONDUCTED IN THE BUFFER AREA.

21. ALL EXISTING PAVEMENT MARKINGS WHICH ARE IN CONFLICT WITH EITHER PROPOSED CHANGES IN TRAFFIC PATTERNS OR PROPOSED TEMPORARY TRAFFIC MARKINGS, SHALL BE REMOVED BEFORE ANY CHANGE IS MADE IN THE TRAFFIC PATTERN. EXCEPTION WILL BE MADE FOR DAYTIME-ONLY TRAFFIC PATTERNS THAT ARE ADEQUATELY DELINEATED BY OTHER TRAFFIC CONTROL DEVICES.

26. THE LIGHTED ARROW PANEL SHALL BE LOCATED AT THE BEGINNING OF THE TAPER AS SHOWN. WHEN PHYSICAL LIMITATIONS RESTRICT ITS PLACEMENT AS INDICATED, THEN IT SHALL BE PLACED AS CLOSE TO THE BEGINNING OF THE TAPER AS POSSIBLE.

SIGN SIZES

DIAMOND WARNING - 48" x 48"
R2-1 REGULATORY - 48" x 60"
R5-18c REGULATORY - 48" x 48"

NOT TO SCALE

MDOT Michigan Department of Transportation
TRAFFIC AND SAFETY
MAINTAINING TRAFFIC TYPICAL

TYPICAL TEMPORARY TRAFFIC CONTROL FOR A ONE-LANE CLOSURE ON A DIVIDED ROADWAY, NO SPEED REDUCTION

DRAWN BY: CON:AE:djf	OCTOBER 2011	M0730a	SHEET 2 OF 2
CHECKED BY: BMM:CRB	PLAN DATE:		

FILE: 342 RD/TS/Typicals/Signs/MT NON FWY/M0730a.dgn REV. 10/26/2011

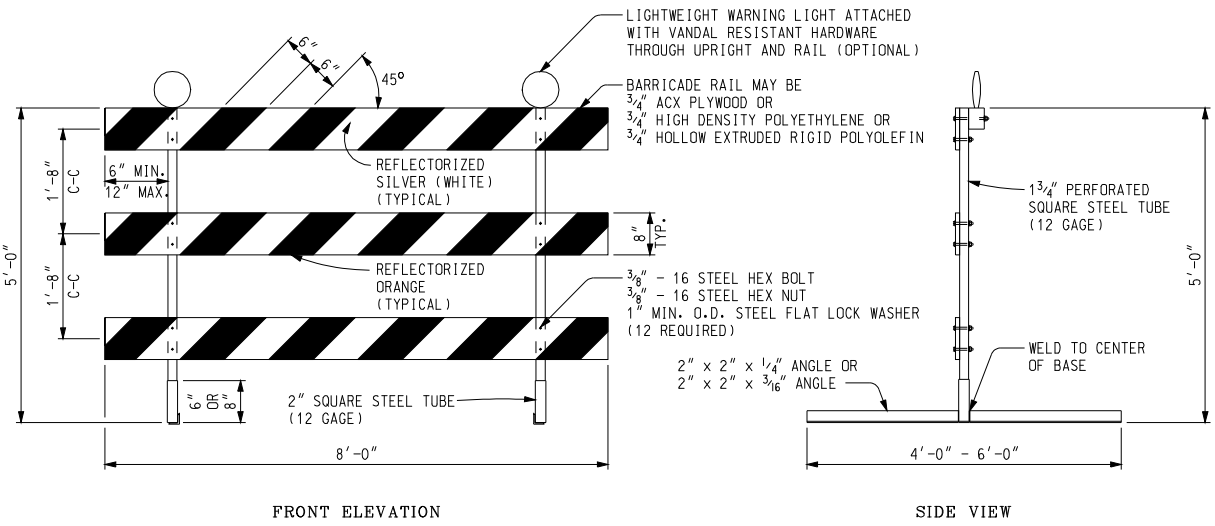

PERFORATED SQUARE STEEL TUBE OPTION

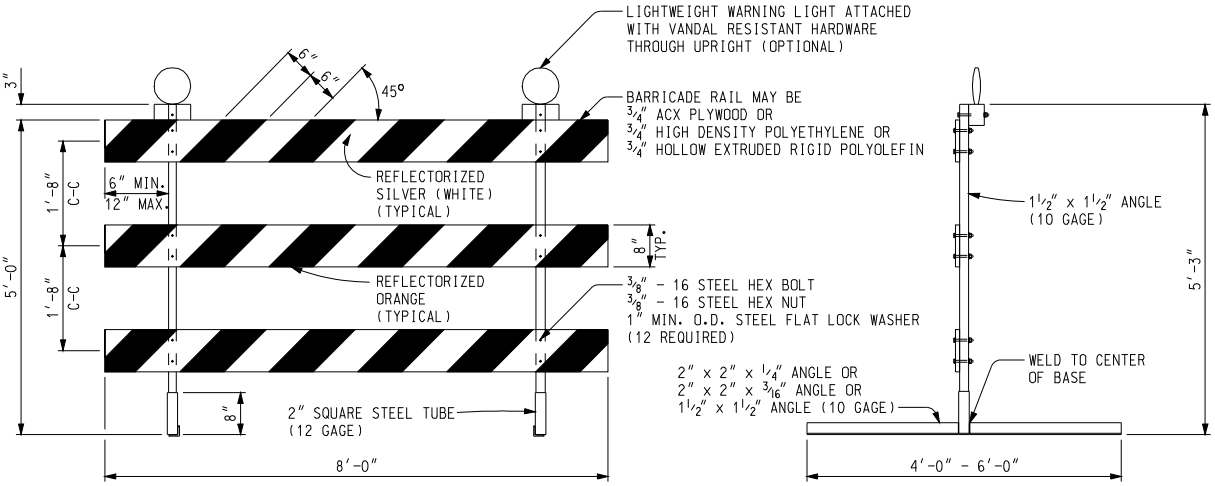

ANGLE IRON OPTION

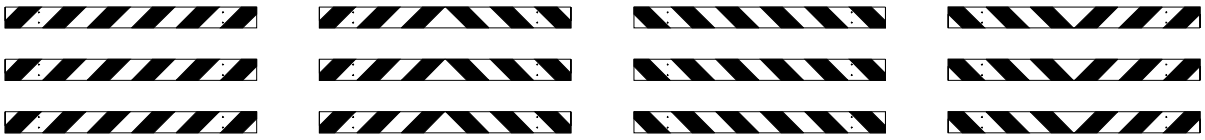

BARRICADE RAIL SHEETING OPTIONS
TYPE III BARRICADES

Other Type III Barricades meeting current NCHRP crash worthy criteria can be found on the FHWA Safety website at http://safety.fhwa.dot.gov/roadway_dept/road_hardware/wzd.htm

NOT TO SCALE

File: T&S/Typ/Signs/WorkZones/wzd 125 d Rev. 09/22/09 PJ

MDOT Michigan Department of Transportation

PREPARED BY TRAFFIC AND SAFETY

DRAWN BY: ECH

CHECKED BY: MWB

ENGINEER OF DELIVERY

ENGINEER OF DEVELOPMENT

(SPECIAL DETAIL)

FHWA APPROVAL DATE

MICHIGAN DEPARTMENT OF TRANSPORTATION
BUREAU OF HIGHWAYS DELIVERY STANDARD PLAN FOR

Temporary Traffic Control Devices

9/22/09
PLAN DATE

WZD-125-E

SHEET 1 of 3

NOTE: THE ORIGINAL SIGNED COPY IS KEPT ON FILE AT THE MICHIGAN DEPARTMENT OF TRANSPORTATION.

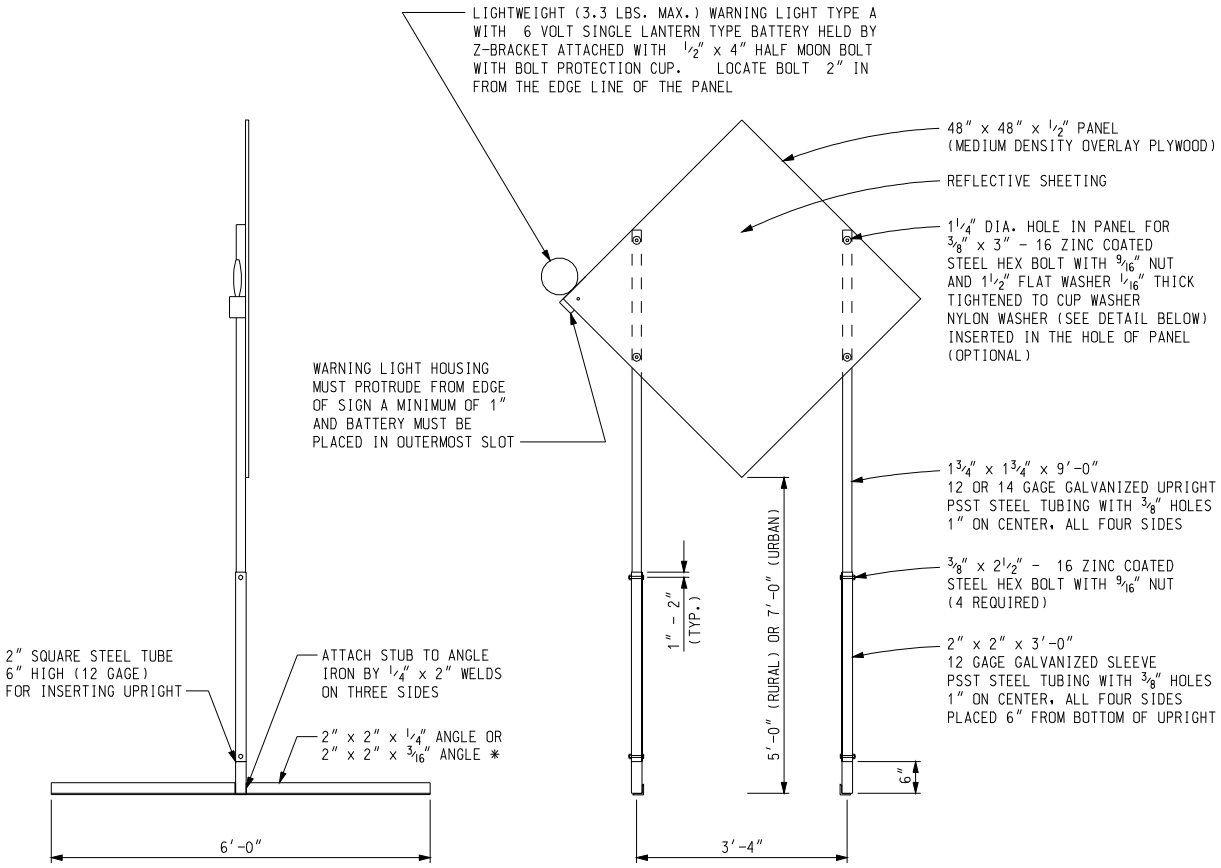

SIDE VIEW

FRONT ELEVATION

TEMPORARY SIGN SUPPORT

(WARNING LIGHT PLACED ON SIDE CLOSEST TO TRAFFIC)

* SIGN STAND IS BALLASTED WITH FOUR OR MORE 35 LB SANDBAGS. A MINIMUM OF ONE ON EACH END.

UPRIGHTS SHALL NOT EXTEND ABOVE THE SIGN PANEL.

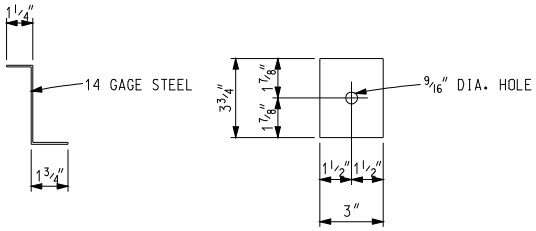

Z-BRACKET DETAIL

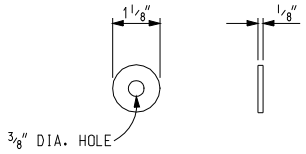

OPTIONAL NYLON WASHER

Other temporary sign supports meeting current NCHRP crash worthy criteria can be found on the FHWA Safety website at http://safety.fhwa.dot.gov/roadway_dept/road_hardware/wzd.htm

NOT TO SCALE

MICHIGAN DEPARTMENT OF TRANSPORTATION BUREAU OF HIGHWAYS DELIVERY STANDARD PLAN	(SPECIAL DETAIL) FHWA APPROVAL DATE	9/22/09 PLAN DATE	WZD-125-E	SHEET 2 of 3
File: T&S/Typ/Signs/WorkZones/wzd 125 d	Rev. 09/22/09 PJ			

NOTE: THE ORIGINAL SIGNED COPY IS KEPT ON FILE AT THE MICHIGAN DEPARTMENT OF TRANSPORTATION.

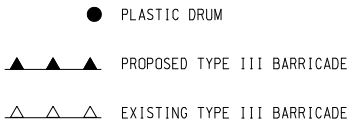

SYMBOLS TO BE USED ON PLANS

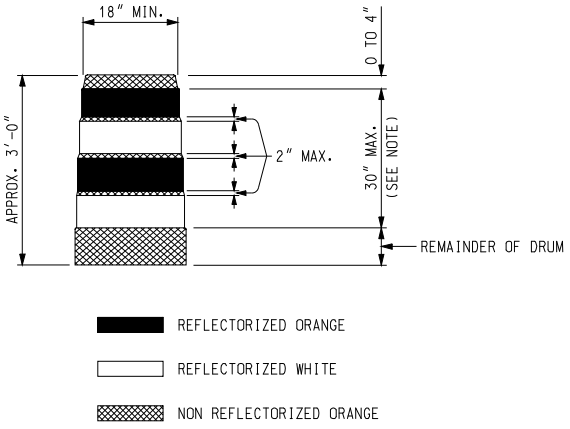

NOTE:
DRUMS SHALL HAVE AT LEAST 4 HORIZONTAL REFLECTORIZED STRIPES (2 ORANGE AND 2 WHITE) OF 6" UNIFORM WIDTH, ALTERNATING IN COLOR WITH THE TOPMOST REFLECTORIZED STRIPE BEING ORANGE. NON REFLECTORIZED SPACES BETWEEN THE HORIZONTAL REFLECTORIZED ORANGE AND WHITE STRIPES SHALL BE ORANGE IN COLOR AND EQUAL IN WIDTH.

PLASTIC DRUM

NOTES:

2" PERFORATED SQUARE STEEL TUBES MAY BE USED TO FABRICATE THE HORIZONTAL BASE OF THE TYPE III BARICADE.

WARNING LIGHTS SHALL BE PLACED ACCORDING TO THE CURRENT STANDARD SPECIFICATIONS FOR CONSTRUCTION AND ALL OTHER PROVISIONS IN THE CONTRACT WHEN THEY ARE USED ON TYPE III BARRICADES.

SEE ROAD STANDARD PLANS R-113-SERIES FOR TEMPORARY CROSSOVERS FOR DIVIDED ROADWAY, AND R-126-SERIES FOR TYPICAL LOCATION AND SPACING OF PLASTIC DRUMS FOR PLACEMENT OF TEMORARY CONCRETE BARRIER.

SIGNS, BARRICADES, AND PLASTIC DRUMS SHALL BE FACED WITH PRESSURE-SENSITIVE REFLECTIVE SHEETING ACCORDING TO THE CURRENT STANDARD SPECIFICATIONS FOR CONSTRUCTION.

SANDBAGS SHALL BE USED WHEN SUPPLEMENTAL WEIGHTS ARE REQUIRED TO ACHIEVE STABILITY OF THE BARRICADE. THE SANDBAGS SHALL BE PLACED SO THEY WILL NOT COVER OR OBSTRUCT ANY REFLECTIVE PORTION OF THE TRAFFIC CONTROL DEVICE.

NOT TO SCALE

MICHIGAN DEPARTMENT OF TRANSPORTATION BUREAU OF HIGHWAYS DELIVERY STANDARD PLAN	(SPECIAL DETAIL) FHWA APPROVAL DATE	9/22/09 PLAN DATE	WZD-125-E	SHEET 3 of 3
File: T&S/Typ/Signs/WorkZones/wzd 125 d	Rev. 09/22/09 PJ			

NOTE: THE ORIGINAL SIGNED COPY IS KEPT ON FILE AT THE MICHIGAN DEPARTMENT OF TRANSPORTATION.